中国科威納总部 COVNA Headquarters

中国 • 东莞 东城区汉塘街26号龙昌微创园C栋

Building C, Longchang Weichuangyuan, No.26 Hantang Street,
Dongcheng District, Dongguan City, China, 523106

邮箱 E-mail：sales@covnav.com

covnav.com

美国科威納总部 COVNA INC

218 Machlin Ct, Ste E7 Walnut, CA 91789 USA

街道:218 Machin Ct.Ste E7

城市:Walnut(沃尔纳特,也称核桃市)

州(省):CA(California-加利福尼亚州)

邮编:91789

香港科威纳集团有限公司

电话 Tel：00852-6958-3020

科威纳香港分部地址：香港九龙旺角弥顿道707-713号

银高国际大厦9楼A30室

COVNA®

诚招全球代理商

COVNA Is Looking For Global Distributors.

COVNA® 科威纳工业自动化有限公司

科威納 COVNA®

电动阀系列

Electric Actuator Valve Series

德国技术 国际品牌

German Technology International Brand

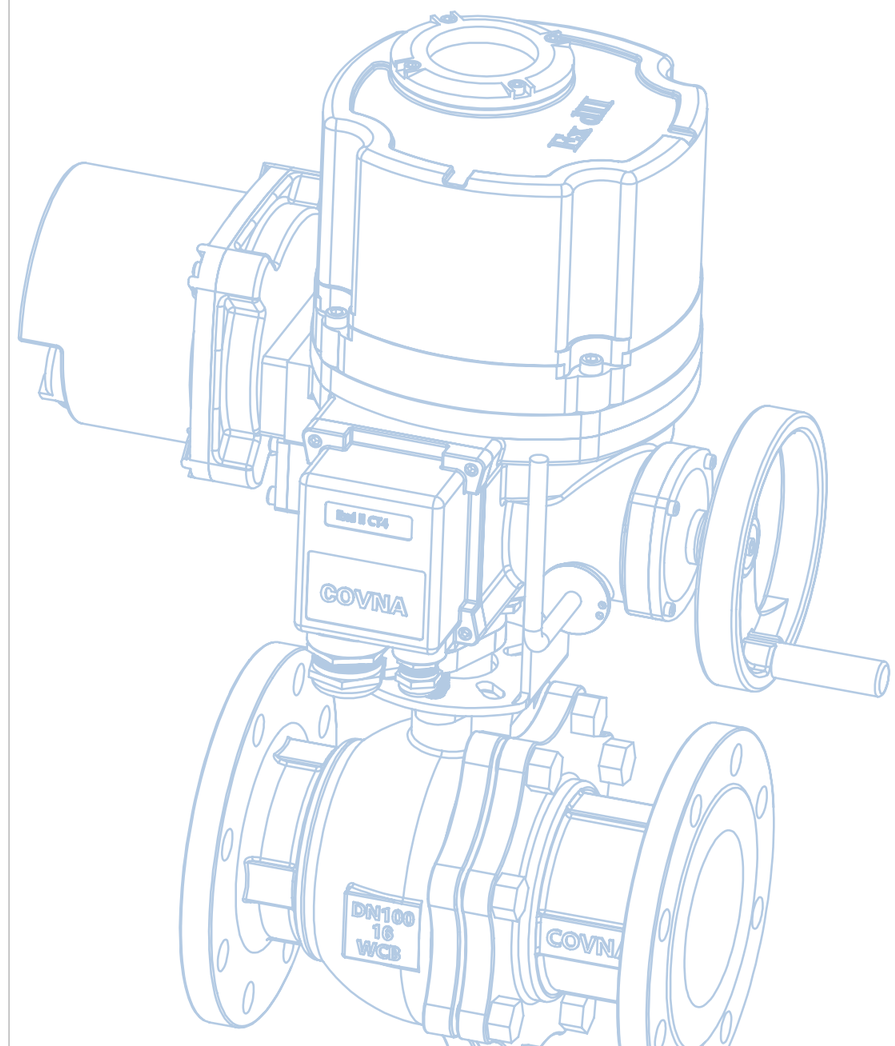

ISO9001 CE RoHS FDA

COVNA GROUP CO., LTD is a world-leading valve manufacturer which specialized in solenoid valves, pneumatic valves, and electric valves for pipeline fluid control. COVNA originated from German technology, has its own R&D, design, production, sales team, and aims to be the global automation application service provider.

In China, COVNA has one R&D Center, 3 production bases and 4 sales subsidiaries. Overseas, COVNA has long-term partnerships with more than 80 distributors to meet the growing demands for COVNA products on the global market.

COVNA production range includes solenoid valves, pneumatic valves, electric valves, gate valves, globe valves, butterfly valves, control valves, safety valves, and various special valves. COVNA products are widely used in Water & Waste water treatment, Automation, Petroleum, Chemical, Electric power, Metallurgy, Mining, Paper-making, Pharmaceutical Industries, etc.

COVNA team make a rapid response to customer's requirements, provide professional product selection guidance and reliable valve application solutions. So far, COVNA has achieved ISO 9001 Quality Manage-ment System Certification, CE Certification, RoHS Certification, SGS international certification, and US food safety FDA certification, and won the national high-tech enterprise in 2017. The company has more than 30 core patents and multi-national certifications. It has a reputation in more than 100 countries and regions around the world and has won the trust of customers.

科威纳工业自动化有限公司

COVNA AUTOMATION INDUSTRIAL CO., LTD

科威纳是源自德国技术，集研发、设计、销售、服务于一体，专业生产管路流体控制的电磁阀、气动阀、电动阀等自动化设备配件，致力于全球自动化应用服务提供商。

在中国，我们拥有1个技术研发中心，3大阀门生产基地和4家子销售公司，销售网点遍布各大城市。在海外，我们与80多家代理商建立了长期战略合作伙伴关系，以满足国际市场对科威纳产品日益增长的需求。

科威纳阀门产品覆盖电磁阀、气动阀、电动阀、闸阀、截止阀、球阀、蝶阀、调节阀、安全阀以及各种特殊阀，产品广泛应用于石油、天然气、化工、电力、冶金、船舶、采矿、造纸、医药、水处理、工业系统等十几个行业及领域。

公司推行精益生产与信息化管理系统相结合的管理模式，快速响应客户要求，努力为客户提供专业、可靠的阀门产品和应用解决方案；并先后通过了ISO9001质量管理体系认证，CE安全认证，ROHS环保认证、SGS国际认证以及美国食品安全FDA认证，并在2017年荣获国家高新技术企业，公司拥有30多项核心专利及多国认证，口碑享誉全球100多个国家与地区，深得广大客户信赖。

COVNA

今天，科威纳集团拥有：

六家全资子公司，世界一流设施

优秀的管理团队及技术研发团队

30多名具备从业资格证的工程师

100多名经过专业培训的员工

日本卧式加工中心 / 美国立式加工中心

进口数控机床 / 进口六轴复合机

全自动化装配生产线

高新技术企业

Today, COVNA Group has:

Six subsidiaries

Aduanced production facilities

Talented managemeut and R&D team

More than 30 engineers with qualification certificates

More than 100 professionally trained employees

CNC machine center

Fully automated assembly line

德国技术 国际品牌

GERMAN TECHNOLOGY
INTERNATIONAL BRAND

专业自动化阀门生产商

SPECIALIZED FLUID CONTROL VALVE MANUFACTURER

品牌优势

- 源自德国技术，严谨精湛；
- 集研发、设计、销售、服务于一体，一站式解决方案；
- 拥有30多项核心专利及多国认证，专业值得信赖；
- 口碑享誉全球100多个国家与地区；
- 受邀参加国际展会、自动化展示，备受行业推崇。

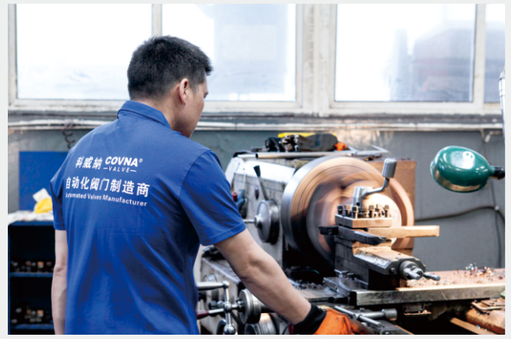

BRAND ADVANTAGES

- ☐ COVNA is derived from German technology, which is rigorous and superb.
- ☐ COVNA focus on providing customers “ONE-STOP” solutions, including R&D, design, Sales, and Service.
- ☐ We have more than 30 patents of invention and multi-national certification. Trusted profession.
- ☐ World-renowned reputation in more than 100 countries and regions; Its business covered over 100 countries in the world, sharing a good reputation and being strongly recognized by customers all over the world.
- ☐ Invited to participate in international exhibitions, automated exhibitions, highly respected by the industry.

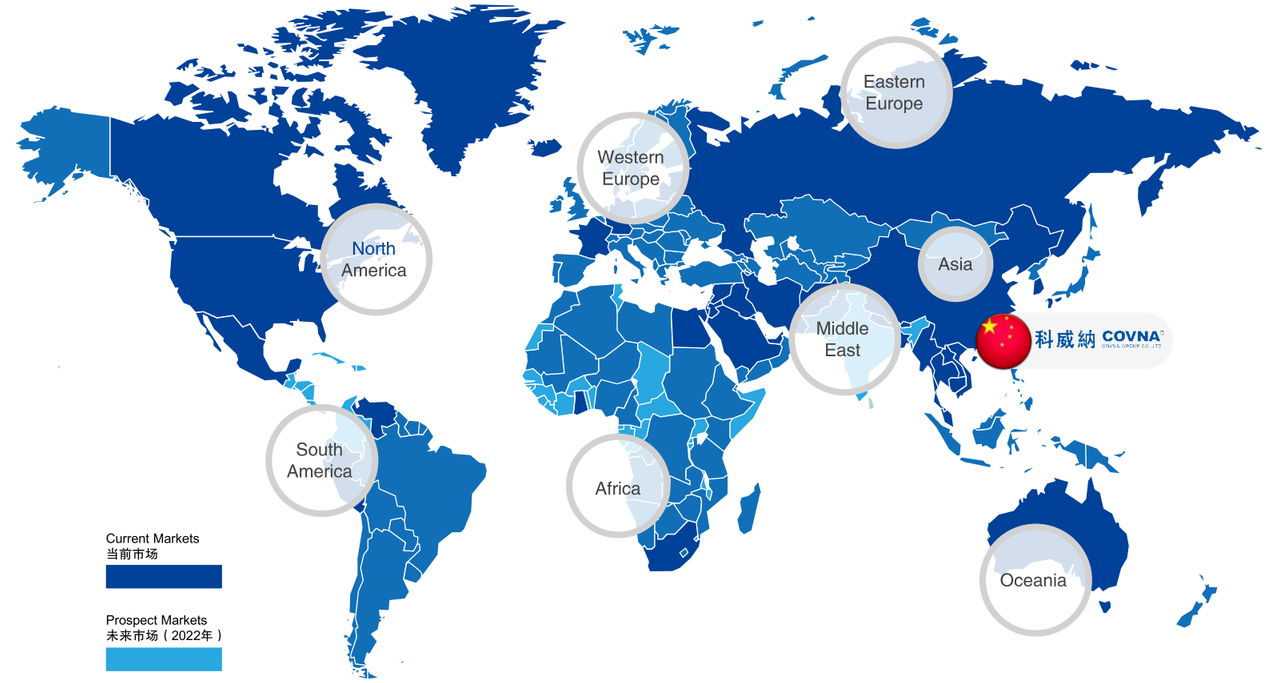

科威纳·连通全球

COVNA CONNECTING THE WORLD

科威納经过二十年的积累，公司在与国内外众多大型企业的合作交流中，
发展和积累了一大批优质客户资源，深得广大客户信赖。

Thanks for your trust on COVNA. Let’s build up our glorious future together!

主营产品

- 电磁阀
- 电动阀
- 气动阀
- 手动阀

MAIN PRODUCT

- ☐ Solenoid valve
- ☐ Pneumatic actuator valve
- ☐ Electric actuator valve
- ☐ Manual valve

科威納成立于2000年，产品销往全世界100多个国家。在业内有着很高的知名度，公司还有着30多项的国家专利，无论是设备还是技术都是非常先进的。

科威納一直注重与国际接轨，为了打造国际化水准的自动化阀门产品，科威納引入了德国先进生产工艺，并不断自主研发新产品。科威納自动化产品在“品牌化发展之路”上一路高歌，品牌影响力、市场占有率不断提升，公司发展迅速。为树立良好的企业形象，并迎合出口贸易的需要，科威納积极的参与各种国际和行业的各项认证。以下展示的也仅仅是COVNA的部分证书。我们将一如既往，继续以优质的产品服务于客户。

COVNA was founded in 2000. Its products have been sold to more than 100 countries around the world with a high reputation in the industry. The company also has more than 30 national patents, advanced equipment and technology.

COVNA always pay attention to the integration with international standards. In order to create an international standard of automatic valve products, it has introduced German advanced production technology and continuously developed new products independently. COVNA develops rapidly with its brand influence and market share continue to increase. In order to establish a good corporate image and meet the needs of export trade, COVNA has been actively achieving various international and industry certifications. Shown below are just part of the COVNA certificates. We will, as always, continue to serve customers with high-quality products.

ISO9001 CE RoHS FDA

科威納 COVNA®

国际品质 民族品牌

证书，不仅是一份认可和荣誉，更是一份责任。
在“品牌化建设”与“致力全球自动化应用服务提供商”的道路上，
科威纳一路向前！

Certificate is not only a recognition and honor,
but also a responsibility.
We will keep moving forward on brand building.

工厂展示
Factory display

外国客户来访
Foreign Customers Visiting COVNA

科威纳海外参展
COVNA Attending Overseas Exhibitions

客户见证
Customer witness

科 威 纳 服 务 全 球 客 户
COVNA SERVE CUSTOMERS WORLDWIDE

HK系列电动阀门 HK Series Electric Actuator Valve

HK系列电动二通球阀 HK Series Electric 2-Way Ball Valve

HK系列电动三通球阀 HK Series Electric 3-Way Ball Valve

Hk系列电动蝶阀 HK Series Electric Butterfly valve

QT系列防爆电动阀门 QT Series Explosion-Proof Electric Actuator Valve

QT系列防爆电动球阀 QT Series Explosion-Proof Electric Ball Valve

QT系列防爆电动蝶阀 QT Series Explosion-Proof Electric Butterfly Valve

小型防爆电动阀系列 Mini Explosion-Proof Electric Actuator Valve

精小型多回转电动阀系列 Mini Multi-Turn Electric Actuator Valve

Z系列多回转电动阀系列 Z-Series Multi-Turn Electric Actuator Valve

精小型电动阀系列 Mini Motorized Valve

时间控制精小型电动阀 Mini Motorized Valve (Time Control)

电 动 执 行 器 种 类

Types of electric actuators

科威纳HK系列电动执行器
HK Series Quarter-turn Electric Actuator

防水电动执行器
IP68 Waterproof Quarter-turn Electric Actuator

科威纳QT系列防爆电动执行器
QT Series Explosion-proof Quarter-turn Electric Actuator

小型防爆电动执行器
Mini Explosion-proof Quarter-turn Electric Actuator

科威纳Z型多回转电动执行器
Z Series Multi-turn Electric Actuator

小型多回转电动执行器
Mini Multi-turn Electric Actuator

科威纳HK系列电动执行器用于控制0-90度旋转的阀门及其他同类产品，如蝶阀、球阀、风阀、档板阀、旋塞阀、百叶阀等，可以广泛应用于石油、化工、水处理、船舶、造纸、电站、供热，轻工等各行业中。它以380V/220V/110V交流电源或24V/110V直流电源为驱动电源，以4-20mA电流信号或0-10V/0~5V DC电压信号为控制信号，可使阀门动动到所需位置，实现自动化控制，最大输出扭距达4000Nm.

COVNA HK Series Electric actuators are used to control 0-90 °rotating valves and other similar products, such as butterfly valves, ball valves, dampers, baffle valves, cock valves, shutter valves, etc., and can be widely used in petroleum, chemical, water treatment, shipping, papermaking , Power stations, heating, light industry and other industries. It uses 380V/220V/110V AC power supply or 24V/110V DC power supply as the driving power source, and uses 4-20mA current signal or 0-10V/0-5V DC voltage signal as the control signal, which can move the valve to the desired position and realize automatic control. The maximum output torque is 4000Nm.

性能特点 Performance Features

1、壳体：壳体为硬质铝合金，经阳极氧化处理或聚酯粉末涂层，耐腐蚀性强.
Shell：body material is hard aluminum alloy, which is treated by hard anodic oxdization and coated by Polyester powder, so that it has great corrosion resistance

2、电机：全封闭鼠笼式电机，体积小，扭矩大，惯性力小，绝缘等级为F级，可防止过热损坏电机。
Motor: fully enclosed cage type motor is small in size and inertia, large in torque. Insulation class is F grade which can prevent motor over-heating;

3、手动结构：手柄的设计保证安全可靠、省力、体积小，不通电时，扳动手柄可进行手动操使用.不用手动时，将扳手至于扳手夹内，方便使用。
Manual Override：small handle is reliable, energy-saving. It can be used for manual operation when electricity is off; In automatic operation, it can be fixed inside the clip for easy operation;

4、指示器：指示器安装在中心轴上，可以观察阀门位置，透镜采用凸出镜设计，不积水，观察进方便。
Indicator: indicator is assembled on center axis, valve position can be observed;Outside mirror design facilitates position observation and prevents water drops accumulation;

5、自锁：精密的蜗轮杆机构可高效传输大扭矩，效率高，噪音低（最大贝50分贝），寿命长：有自锁功能，防止反转，传动部分稳定 可靠，无需再加油。
Self Lock: accurate turbo-worm structure can output large torque with high efficiency and little noise (Max. 50 decibel). Service life is quite long. Its self lock function can stop reverse rotation. Drive part is stable and reliable without additional lubrication;

6、防脱螺栓：拆除外壳时，螺栓附在壳体上，不会脱落。
Captive Bolt: bolts won't fall off when cover is disassembled;

7、安装：底部安装尺寸符合ISO5211/DIN3337国际标准，孔成双四方形便于方杆的阀线性或45度转角安装，适应性强，可以垂直安装，也可以水平安装。
Application: bottom connection complies with ISO5211/DIN3337 Standard. Star square hole is easy for square valve stem linear or 45° rotation application; Both vertical and horizontal assemble are available;

8、多种速度：全行程时间5秒，10秒，30秒，60秒，90秒，120秒，240秒等。
Multiple speeds: The total travel time is 5 seconds, 10 seconds, 30 seconds, 60 seconds, 90 seconds, 120 seconds, 240 seconds, etc.

9、自成一体：智能控制模块高度集成 于电动装置本体中，无须外接定位器等
Self-contained: the intelligent control module is highly integrated in the electric device body, without the need for an external positioner, etc.

10、线路：控制线路符合单相或三相电源标准，线路布置紧凑合理，接线端子可有效满足各种附加功能的要求。
Diagram: control diagram complies with single phase or three phase wiring standard, reasonable wiring diagram and connection terminal can meet requirement of other optional functions.

手动型
Manual Override

开关型
ON/OFF Type

调节型
Regulation Type

智能型
Intelligent Type

HK系列小型电动执行器性能特点 HK series Quarter-turn electric actuator performance characteristics

性能 Performance / 机型 Model		05	10	16	30	60	125	250	400
回转角度 Angle of Rotation		0~90°	0~90°	0~90°	0~90°	0~90°	0~90°	0~90°	0~90°
AC220V 交流电 AC Voltage	输出力矩 Torque Output	50Nm	100Nm	160Nm	300Nm	600Nm	1250Nm	2500Nm	4000Nm
	动作时间 90° Cycle Time	10S/ 20S/60S	15S/30S/60S			30S/60S	90S	90S	90S
	工作电流 Working Current	0.23A	0.35A	0.40A	0.45A	0.60A	1.03A	1.85A	2.7A
	电机功率 Drive Motor	50W	75W	80W	100W	130W	210W	285W	360W
	电 源 Voltage Options	AC220V, AC110V, AC24V							
	控制电路 Control Circuit	B型：开关型无源触点型 B: ON/OFF Type with Passive Contact Signal Feedback							
DC 直流电 DC Voltage	输出力矩 Torque Output	60Nm	110Nm	170Nm	330Nm	680Nm	1300Nm	2500Nm	
	动作时间 90° Cycle Time	8S	11S	11S	9S	35S	32S	32S	
	启动电流 Starting Current	0.74A	1.40A	1.40A	3.80A	7.0A	3.8A	4.3A	
	工作电流 Working Current	0.38A	0.38A	0.40A	1.03A	0.70A	1.2A	1.4A	
	电机功率 Drive Motor	9.5W	9.0W	9.6W	30W	33W	30W	33W	
	电 源 Voltage Options	DC12V，DC24V, DC110V，DC220V							
	控制电路 Control Circuit	F型：直流电机控制电路 F: DC24V/ DC12V Direct ON/OFF Type							
AC380V	输出力矩 Torque Output	70Nm	100Nm	200Nm	300Nm	600Nm	1300Nm	2500Nm	
	动作时间 90° Cycle Time	20S	27S	27S	25S	26S	50S	50S	
	启动电流 Starting Current	0.20A	0.28A	0.30A	0.55A	0.45A	0. 60A	0. 77A	
	工作电流 Working Current	0.16A	0.25A	027A	0.53A	0. 43A	0. 65A	0. 75A	
	电机功率 Drive Motor	51W	70W	77W	117W	220W	90W	103W	
	电 源 Voltage Options	AC380V							
	控制电路 Control Circuit	G型：三相交流380V无源触点型 （默认） G: AC380V Three-Phase Power Supply with Passive Signal Feedback （Standard） H型：三相交流380V开度信号型 （可选） H: AC380V Three-Phase Power Supply with Resistance Potentiometer Signal Feedback （Optional）							
防护等级 Protection Class		IP65							
环境温度 Ambient Temp.		-30°C~+60°C							
安装方位 Installation Angle		360° 任意角度安装 Installation at any angle							
电气接口 Electrical Connection		G1/2防水電纜接頭、電源綫、信號綫各一個 G1/2 Water-proof Cable Connectors, Electric Power Wire, Signal Wire							

注：不能将两台或数台电动装置并联，即不能用同一控制器的接点去控制数台电动装置，否则会造成失控，电机过热及损坏等。
Note: Can't connect one actuator parallel with other ones, in other words, can't use the same control -ler contact points to control two and above actuators, otherwise it will cost out of control, motor overheating, product damage and shorter service life.

HK系列开关型性能特点 ON/OFF Type Performance characteristics of HK Series

科威纳HK系列开关型执行器在执行阀门操作时只有开、关两个动作(0°或90°)，也就是只能令阀门处于全开或全关的状态，不能控制阀门开关的幅度，也就不能对介质流量进行控制。开关型阀门一般用于开关两位切断使用，有全开和全关两个位置，作用是开或关以导通和截断里面的工作介质，对流通特性没有特别的要求，但对于开关速度、泄漏量的要求高于调节阀。

COVNA HK Series on-off actuator has only two actions (0°or 90) when performing valve operations, which means that the valve can only be fully open or fully closed. Can not control the amplitude of the valve switch, and can not control the medium flow. The on-off valve is generally used to switch off the two positions. There are two positions of full open and full closed. The function is to open or close to conduct and cut off the working medium inside. There is no special requirement for the flow characteristics, but for the switching speed, The leakage requirement is higher than that of the regulating valve.

电 源 Voltage Options	AC110V, AC220V, AC380V, DC24V, AC24V
绝缘电阻 Insulation Resistance	100MΩ/500V
耐压等级 Withstand Voltage	1500V; 1分钟
控制电路 Control Circuit	A型：开关型（标准型） A: ON/OFF Type with Light Indicator Signal Feedback C型：开关型带电阻电位计反馈 B: ON/OFF Type with Passive Contact Signal Feedback E型：调节型带伺服控制器模块 C: ON/OFF Type with Resistance Potentiometer Signal Feedback G型：三相交流380V无源触点型 D: ON/OFF Type with Resistance Potentiometer and Neutral Position Signal Feedback B型：开关型无源触点型 E: Regulation Type with Servo Control Module D型：开关型带电阻电位计和中间位置反馈 F: DC24V/ DC12V Direct ON/OFF Type F型：直流电机控制电路 G: AC380V Three-Phase Power Supply with Passive Signal Feedback H型：三相交流380V开度信号型 H: AC380V Three-Phase Power Supply with Resistance Potentiometer Signal Feedback
选装功能 Optional Function	◆过力矩保护器 ◆除湿加热器 ◆不锈钢支架、联轴器 Over Torque Protectors, Dehumidify Heater, Stainless Steel Coupling & Yoke

HK系列调节型性能特点 Regulation type Performance characteristics of HK Series

科威纳HK系列调节型电动执行器具有开关型一体化结构的功能，相对增加了智能控制模块，从而对阀门进行准确地控制(0°~90°之间角度任意调节)，调节介质流量，通过输入或者输出控制信号4-20mA或者0-10V/1-5V可以控制阀门的开度; 性能反应在控制精度，控制精度一般在误差1%以内，能很准确地对开度和流量进行调节。

COVNA HK Series regulation type electric actuator has the function of a switch type integrated structure, and relatively increase the intelligent control module,so as to accurately control the valve (any angle between 0°~90°), adjust the medium flow, and control by input or output signal 4-20mA or 0-10v/1-5v ;the performance reflects the control accuracy,whic is generally within 1% of the error, so that the opening degree and flow rate can be adjusted very accurately.

电 源 Voltage Options	AC110V, AC220V, AC380V, DC24V, AC24V
输入信号 Input Signal	4-20mADC 1-5VDC 0-10VDC
输出信号 Output Signal	4-20mADC 1-5VDC 0-10VDC
基本误差 Tolerance	± 0.5%
回 差 Return Difference	<0.3%
死 区 Dead Zone	0.1% to 1.6%
阻尼特性 Damping Characteristics	0
机械重复性误差 Mechanical Repeatability Error	0%

HK系列 电动执行器接线图

Electric Actuator Wiring Diagram

HK系列电动执行器开关型接线图 ON/OFF Type Wiring Diagram COVNA HK Series

六线控制，控制电压AC220V，通电打开，断电关闭，同时输出开到位信号和关到位信号，是常用的电动执行器。

Six-wire control, control voltage AC220V, power-on open, power-off close, and output open end signal and close end signal at the same time, it is a commonly used electric actuator.

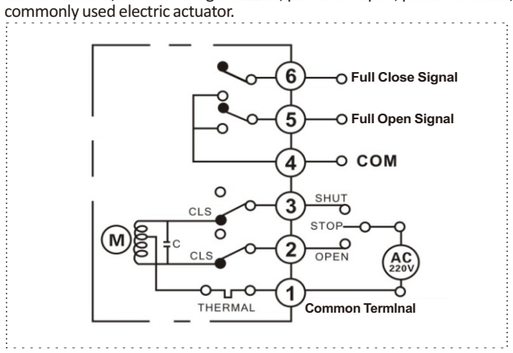

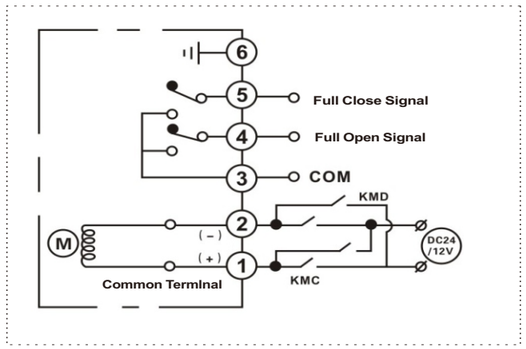

B型:开关型 (标准型) 带无源触点信号反馈(AC220V)

功能：通过开关电路实现开路、开关操作，并输出一组指示阀门全开、全闭位置无源开关信号（全开、全闭）

结构：带两个中间位置开关

B: ON/OFF Type with Passive Contact Signal Feedback

Function: Finish open or close operations by the circuit, and the actuator outputs a set signal of passive position (full opening, full closing)

Structure: with two neutral positions switches

F型:直流电机控制电路(DC24V)

功能：通过外部电路对直流电源正负极换，实现开启、关闭操作并输出一组无源触点（全开、全闭）

F: DC24V/ DC12V Direct ON-OFF Type

Function: The external circuit make positive and negative conversion of DC power to open or close, and the actuator outputs a set signal of passive position (full opening, full closing)

HK系列电动执行器调节型接线图 Regulation Type Wiring Diagram COVNA HK Series

六线控制，通过输入或者输出控制信号4-20mA或者0-10v可以控制阀门的开度，调节介质流量。

Six-wire control, through the input or output control signal 4-20ma or 0-10v can control the valve opening and adjust the medium flow.

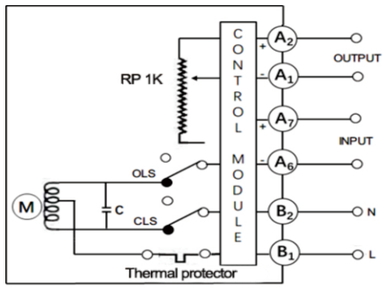

E型：调节型带伺服控制器模块(AC220V)

功能： 调节作用，输入/输出信号: 4-20mADC，1-5VDC或0-10VDC

结构：带控制模块和1KΩ电位器

E: Regulation Type with Servo Control Module

Function: Modulating, input & output DC4-20mA, 1-5VDC, 0-10VDC

Structure: With servo control module and 1000Ω potentiometer

特 别 注 意 CAUTION

不能将两台或数台电动装置并联，即不能用同一控制器的接点去控制数台电动装置，否则会造成失控，电机过热及产品损坏等，会大大影响电动装置 的使用寿命。

Can't connect one actuator parallel with other ones, in other words, can't use the same control -ler contact points to control two and above actuators, otherwise it will cost out of control, motor overheating, product damage and shorter service life.

此三种只是常用接线方式，如需了解其它接线方式，请联系我司人员(0769-22456666), 谢谢！

These three are just common wiring methods, if you need to understand other wiring methods,Please contact our staff, (+769-86-22456666), thank you!

HK系列 电动执行器尺寸图

Electric Actuator Dimensions

HK系列电动执行器外形尺寸图 Outline Size Dimension of HK Series Electric Actuator

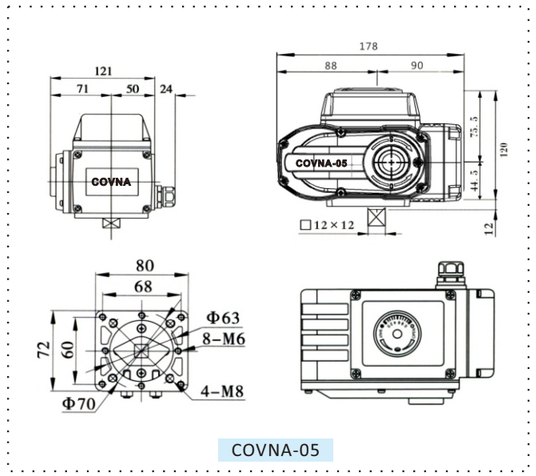

COVNA-05

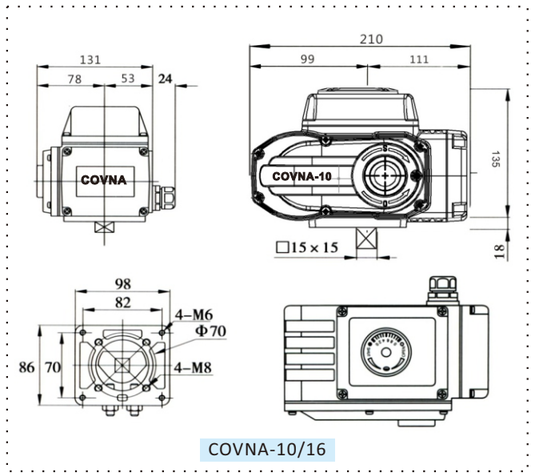

COVNA-10/16

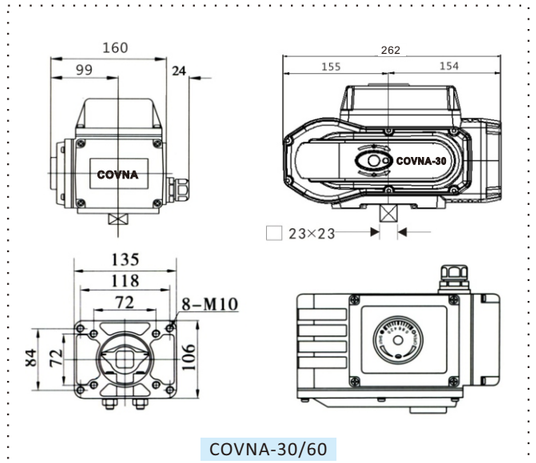

COVNA-30/60

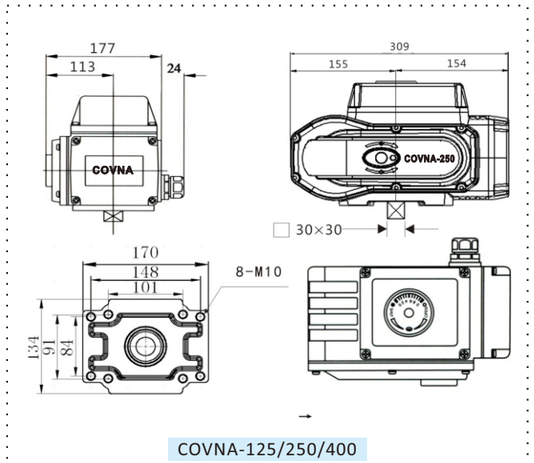

COVNA-125/250/400

HK系列电动执行器各部位名称 HK Series Electric Actuator Construction

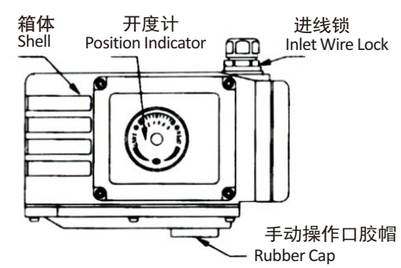

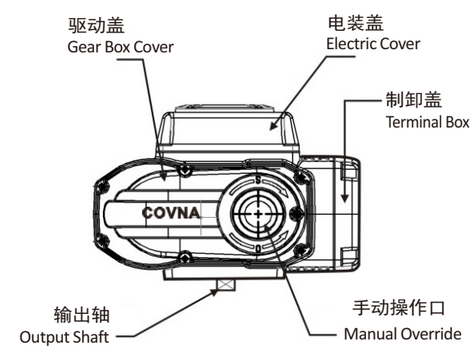

1. 安装环境 Installation environment

①本产品即可在室内安装，也可在室外安装，周边环境温度-30℃~+60℃范围内。
②本产品属非防爆产品，请注意避开易燃易爆等环境。
③在长期有雨水、原料等飞溅物和阳光直射的环境，需要安装保护整体的盖子。
④请预留接线，手动操作等维修用空间。

- The product can be installed indoor and outdoor, The surrounding environment temperature should be in -30°C~+60°C
- product is non-explosion-proof production, and the installation must be avoided being in flammable or explosive environment etc.
- The actuator should be in protection box in the environment of long-term with the splash of rain, material and direct sunlight.
- Please reserve space for controller, manual operation.

2. 工作介质温度 Temperature of working medium

①与阀门配套使用时，工作介质温度传到机体上面，机体温度会升高。
②工作介质是高温时与阀门连接的支架器，减少热传导作用。

- When matching with the valve, the actuator body's temperature will a bit rise if medium temperature happen heat transfer.
- If the temperature of medium is high, the bracket has the function of reducing heat conduction.

3. 安装在阀门上 Installed on the valve body

①手动转动阀门，确定无异常情况，并使用阀门处于全闭位置。
②将连轴器一端套在阀门芯轴上。
③将电动执行器机体转到全闭位置，出力轴插入联轴器四方孔内。
④紧固电动执行器机体和阀门平台间的螺钉。
⑤用手柄转动执行器机构，确认运行平稳，无偏心，无歪斜。注意不要超程。

- Manually operate the actuator to drive the valve, confirm it does not have abnormal situation. Turn the valve in full closed position.
- Set one end of couplings on valve spindle.
- Turn the electric actuator to full closing position, and insert output-input shaft into the square holes of couplings.
- Set the screw between the electric actuator and valve bady.
- Turn actuator by hand shank, confirm that it moves translation, no eccentric, no skew and no overrun.

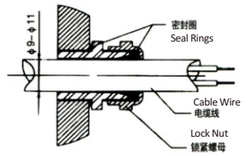

4. 安装电缆线 Cable installation

①用电缆管时，电缆管外径是¢9~¢11，要充分采取防水对策，执行器机体高于电线管，磁电线管内水珠不至流进执行器机体以确保其安全。
②用电缆使时，其外径是¢9~¢11的电缆。一律不准使用与电阻直径不相应的电缆，否则水珠可能从线索进入执行机构内，损坏所有内部零件。
③信号线原则上要使用屏蔽线，不要与动力线平行配线。

- Install wire tubes, The outside diameter of wire tubes should be ¢9-¢11. Take measures to proof water. To prevent actuator from flowing into wire tubes water, the actuation position should higher than wire tubes position.
- When installing wire, the outside diameter of wire should be ¢9-¢11. in case the water flow into actuator interior from line locking, all wire that are not allowed to be used.
- The signal wire should be shielded wire in principle, don't parallel it to power wire.

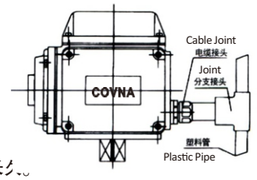

5. 特别提示 Special tips

①不要将两台或数台电动装置的动力线并联，也就是不能用同一接线去控制多台电动装置，
②否则会造成失控，会电机过热及产品损坏等，会大大影响电动装置的使用寿命。
③如电动装置是安装在户外时，建议加装防雨、防护罩，这样能使电动机构的使用性能更稳定，寿命更长。

- Caution: can't connect one actuator parallel with one another, in other words, can't use the same controller contact point to control more than one actuator, otherwise it will cause out of control, motor overheating, product damage, shorter service life.
- If the actuator is installed outdoor, we suggest equipping other protective cover to proof water, stabilize mechanical property, make a longer service life.

5. 电源电压：220VAC ±10% 50Hz/60Hz Power voltage：220VAC 50Hz/60Hz

6. 断线开关保险线的选用 Guard line options for witch of cutting-off winding

Item	Guard Line	Motor Power W/F	Item	Guard Line	Motor Power W/F
05	3A	10	30/60	7A	40, 90
10/16	5A	25, 30	125/250/400	10A	100, 120, 140

1. 极限位置开关的调整 Adjustment of limit position switch

①将阀门手动至全闭位置。
②松开形成板块固定螺钉，转动下面板块，使下面形成开关动作，微动开关动作时会发出“咔嚓。”声音，然后固定螺钉。
③全开位置调整方法同上。

- Turn the valve to full opening position by hand.
- Loosen the screw of travel block and turn the block to drive the travel switch, then fine-tuning sensitive switch until hearing "click", after that, set screw.
- The way of adjustment full opening position is the same as above.

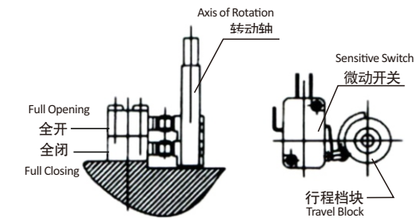

2. 中间位置开关的调整 Adjustment of middle position switch

①用手柄驱动阀门这所需位置。
②松开形成档块固定螺钉，转动形成板块是相对应的微动开关动作，然后固定螺钉。
③两个中间位置开关动作位置可根据使用需要进行调整。

- Use hand shank to drive the valve to the position it need.
- Loosen the screw of travel block and turn the travel block to drive sensitive switch, then set screw.
- These two neutral position switches' position could be adjusted according to need.

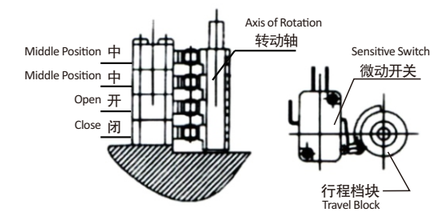

3. 定位器的调整 Adjustment of potentiometer

①用手柄驱动执行机构向中间位置运行使指针正指50%刻度线。
②用万用表测量电位器始端和终端阻值（电位器1.3两角间阻值），记下阻值R(如无特别要求，电位器的出厂默认为1KΩ ± 15%)。
③用适当外力作用在电位器安装板上，使开度齿轮和电位器齿轮脱离咬合
④将万用表两表笔分别接在电位器动臂（电位器两脚）和另外任意一端上，缓缓转动电位器齿轮，观察万用表读数，当阻值R/2 ± 2Ω时，停止调整并撤销外力使开度齿轮与电位器齿轮回复咬合即可。

- Use hand shank to drive actuator to neutral position, and turn the pointer point to 50% scale line.
- Use multimeter to test resistance of first and third port of potentiometer (resistance between the first port and third port in potentiometer), and mark R (potentiometer default is 1KΩ ±15% if no special request).
- Separate potentiometer gear from the opening gear by suitable external force on potentiometer fixing plate.
- Put one probe of multimeter to one potentiometer terminal, the other probe to another terminal, then rotate potentiometer gear and see number in multimeter. When the resistance value is equivalent to R/2 ±2Ω, stop rotating, after that, mesh these two gears.

4. 机械档块的调整 Adjustment of mechanical limit location block

①用手柄驱动 阀门至全开位置并使全开位置开关动作（微动开关动作时会发出“咔嚓”声音）
②松开锁紧螺母，使调整螺钉与机械档块相接触，然后将调整螺钉往回转动半圈，锁紧螺母。
③用同样的方法进行全闭位置的调整。

- Use hand shank to drive valve to full opening position and operate the switch (sensitive switch makes crack sound when it is running).
- Loosen the nut and turn the adjusting screw to touch the mechanical limit location block, then turn the adjust ing screw a half turn back, set nut.
- Adjusting the full opening position by the same way as above.

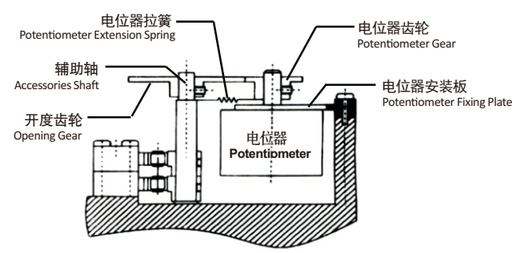

定位器的调整
Adjustment of potentiometer

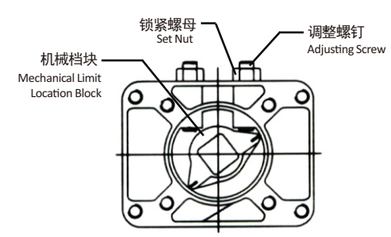

机械档块的调整
Adjustment of mechanical limit location block

电 动 球 阀
Electric Ball Valve

HK60-Q-3PS 电动三片式内螺纹球阀
Electric 3-PCS Threaded Ball Valve

HK60-Q-W 电动二通卫生级球阀
Electric 2-Way Sanitary Ball Valve

HK60-Q-2PS-F 电动不锈钢法兰球阀
Electric 2-Way Flanged Ball Valve

HK60-Q-B 电动薄型球阀
Electric Wafer Thin Ball Valve

HK60-Q-P 电动二通UPVC球阀
Electric 2-Way UPVC Ball Valve

HK60-Q-G 电动二通高压球阀
Electric 2-Way High-Pressure Ball Valve

HK60-Q-2PS-F 电动不锈钢法兰球阀
Electric 2-Way Flanged Ball Valve

技术规范 Technical Parameter

设计依据 Design Basis		API, ANSI,JIS
设计标准 Design Standard		GB/T12237, ANSI API1608,JIS B2071
结构长度 Face To Face Dimension	法兰连接 Flange Connecting	GB/T12221 API 6D, ANSI B16.10 JIS B2002
连接法兰尺寸 Connecting Flange Size		GB/T9113, ANSI B16.5, JIS B2212 B2214
试验和检验 Test & Inspection		GB/T12237, API 598, JIS B2003

※注：系列球阀结构长度及连接法兰尺寸可根据用户要求设计制造。
Note: The structural length and connecting flange size of ball valve series can be designed and manufactured as per users'requirments.

主要零件材质表 Main Parts Materials

序号 No.	零件名称 Component	材质 Material C	P	R
1	右阀体 Right valve	A216-WCB	A351-CF8	A351-CF8M
2	螺母 Nut	A194-2H	A276-304	A276-316
3	垫片 Gasket	PTFE、石墨金属复合垫 Graphite Metal Composite Pad		
4	螺栓 Screw	A193-B7	A276-304	A276-316
5	阀体 Body	A216-WCB	A351-CF8	A351-CF8M
6	阀座 Seat	PTFE、尼龙(Nylon)、对位聚苯(PPL) 硬质合金 Hard Alloy		
7	球体 Ball	A182-F304	A182-F304	A182-F316
8	阀杆 Stem	A276-410	A276-410	A276-316
9	垫片 Gasket	A276-304	A276-304	A276-316
10	填料 Packing	PTFE 、柔性石墨 Flexible Graphite		
11	衬套 Bushing	PTFE复合轴承 Composite Bearings		
12	压盖 Gland	A216-WCB	A351-CF8	A351-CF8M
13	螺栓 Screw	A194-2H	A276-304	A276-304
14	螺栓 Screw	A194-2H	A276-304	A276-304
15	连接支架 Connecting Yoke	A351-CF8	A351-CF8	A351-CF8
16	螺栓 Screw	A194-2H	A276-304	A276-304
17	连接套 Connecting Set	A351-CF8	A351-CF8	A351-CF8
18	电动装置 Electric Actuator	开关型、调节型、多回转型、防爆型 ON/OFF、Regulation 、Multi-Turn、Explosion-Proof		
19	手动装置 Hand Gear	塑料 Plastic		

※注：系列球阀主要零部件及密封圈的材质可根据实际工况条件或用户特殊要求设计选用。
Note: The main spare parts and sealing-ring materials of ball valve series can be designed for options as per real working conditions and users'special requirements.

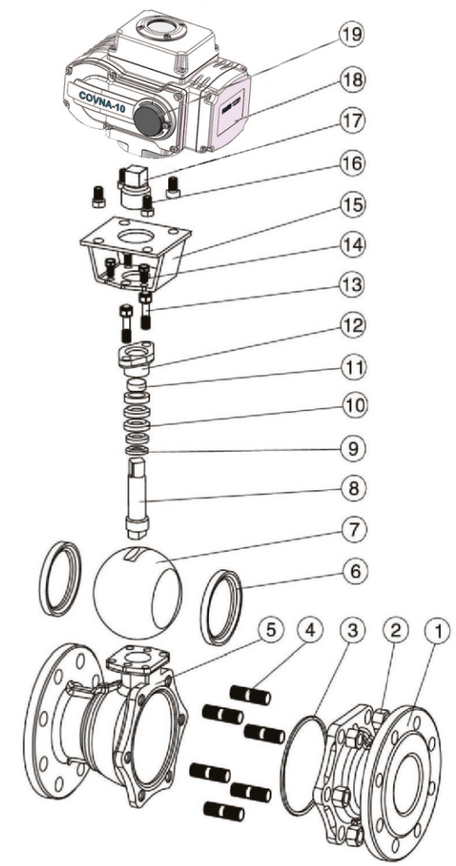

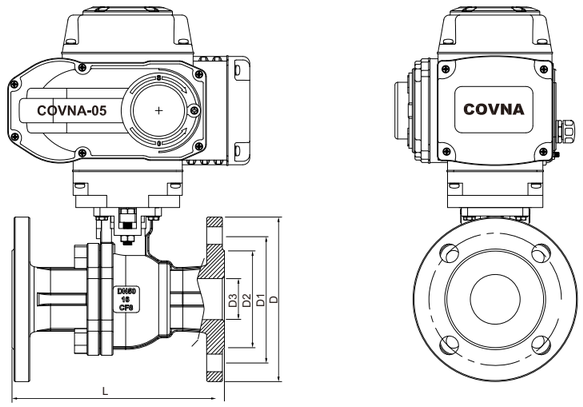

主要外形及连接法兰尺寸 GB-PN16
Main Outline and Connecting Flange Size

MEDLE	DN15	DN20	DN25	DN32	DN40	DN50	DN65	DN80	DN100	DN125	DN150	DN200
G	1/2"	3/4"	1"	1-1/4"	1-1/2"	2"	2-1/2"	3"	4"	5"	6"	8"
D3	15	20	25	30	40	50	65	80	100	125	150	200
D2	45	55	65	78	85	100	120	135	155	185	210	265
D1	65	75	85	100	110	125	145	160	180	210	240	295
D	95	105	115	135	145	160	180	195	215	245	280	335
L	130	140	150	165	180	200	222	250	280	320	360	400
n-φd	4-ϕ14	4-ϕ14	4-ϕ14	4-ϕ18	4-ϕ18	4-ϕ18	4-ϕ18	8-ϕ18	8-ϕ18	8-ϕ18	8-ϕ18	12-ϕ23

主要外形及连接法兰尺寸 GB-PN25
Main Outline and Connecting Flange Size

MEDLE	DN15	DN20	DN25	DN32	DN40	DN50	DN65	DN80	DN100	DN125	DN150	DN200
G	1/2"	3/4"	1"	1-1/4"	1-1/2"	2"	2-1/2"	3"	4"	5"	6"	8"
D3	15	20	25	30	40	50	65	80	100	125	150	200
D2	45	55	65	78	85	100	120	135	160	190	220	250
D1	65	75	85	100	110	125	145	160	190	220	250	310
D	95	105	115	140	150	160	180	195	230	270	300	360
L	130	130	140	165	180	200	222	250	280	320	360	457
n-φd	4-ϕ14	4-ϕ14	4-ϕ14	4-ϕ18	4-ϕ18	4-ϕ18	8-ϕ18	8-ϕ18	8-ϕ 23	8-ϕ25	8-ϕ25	12-ϕ25

*注：
系列球阀结构长度及连接法兰尺寸可根据用户要求设计制造。
根据不同的扭矩、介质，适配的执行器型号及尺寸可能有所不同。
以上执行器配置数据均采集自软密封(F, N, P)阀门，硬密封阀门的配置及数据请咨询本公司。

Note:
The structural length and connecting flange size of ball valve series can be made to order.
The actuator model vary with different output torque and medium.
Above data are all on basis of soft-sealed valves(F, N, P), contact COVNA for hard-sealed valves data.

金属密封阀座
Metal sealing seat

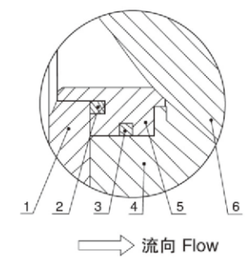

温度范围 Temperature Range -20~160℃/230℃

高温型金属密封阀座
High-temperature metal seal seat

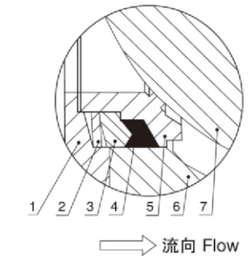

温度范围 Temperature Range -20~425℃

软阀座
Soft Seat

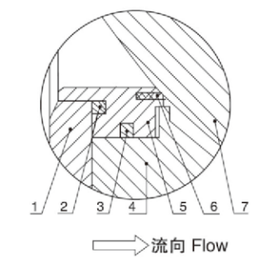

温度范围 Temperature Range -20~160℃

主要外形及连接法兰尺寸 GB-PN40
Main Outline and Connecting Flange Size

MEDLE	DN15	DN20	DN25	DN32	DN40	DN50	DN65	DN80	DN100	DN125	DN150	DN200
G	1/2"	3/4"	1"	1-1/4"	1-1/2"	2"	2-1/2"	3"	4"	5"	6"	8"
D3	15	20	25	30	40	50	65	80	100	125	150	200
D2	45	55	65	78	85	100	120	135	160	188	218	282
D1	65	75	85	100	110	125	145	160	190	220	250	320
D	95	105	115	135	145	160	180	195	230	270	300	375
L	140	152	165	178	190	216	241	283	305	381	403	419
n-φd	4-ϕ14	4-ϕ14	4-ϕ14	4-ϕ18	4-ϕ18	4-ϕ18	8-ϕ18	8-ϕ18	8-ϕ23	8-ϕ25	8-ϕ25	12-ϕ34

主要外形及连接法兰尺寸 GB-PN63
Main Outline and Connecting Flange Size

MEDLE	DN15	DN20	DN25	DN32	DN40	DN50	DN65	DN80	DN100	DN125	DN150	DN200
G	1/2"	3/4"	1"	1-1/4"	1-1/2"	2"	2-1/2"	3"	4"	5"	6"	8"
D3	15	20	25	30	40	50	65	80	100	125	150	200
D2	55	68	78	82	95	105	13	140	168	202	240	300
D1	75	90	100	110	125	135	160	170	200	240	280	345
D	105	125	135	150	165	175	200	210	250	295	340	405
L	140	152	165	178	190	216	241	283	305	381	403	419
n-φd	4-ϕ14	4-ϕ18	4-ϕ18	4-ϕ23	4-ϕ23	4-ϕ23	8-ϕ23	8-ϕ23	8-ϕ25	8-ϕ30	8-ϕ34	12-ϕ34

*注：
系列球阀结构长度及连接法兰尺寸可根据用户要求设计制造。
根据不同的扭矩、介质，适配的执行器型号及尺寸可能有所不同。
以上执行器配置数据均采集自软密封(F, N, P)阀门，硬密封阀门的配置及数据请咨询本公司。

Note:
The structural length and connecting flange size of ball valve series can be made to order.
The actuator model vary with different output torque and medium.
Above data are all on basis of soft-sealed valves(F, N, P), contact COVNA for hard-sealed valves data.

主要外形及连接法兰尺寸 ANSI-150#
Main Outline and Connecting Flange Size

MEDLE	DN15	DN20	DN25	DN32	DN40	DN50	DN65	DN80	DN100	DN125	DN150	DN200	DN250
G	1/2"	3/4"	1"	1-1/4"	1-1/2"	2"	2-1/2"	3"	4"	5"	6"	8"	10"
D3	15	20	25	30	40	50	65	80	100	125	150	200	250
D2	34.9	42.9	50.8	63.5	73	92.1	104.8	127	157.2	185.7	215.9	269.9	323.8
D1	60.3	69.9	79.4	88.9	98.4	120.7	139.7	152.4	190.5	215.9	241.3	298.5	362
D	90	100	110	115	125	150	180	190	230	255	280	345	405
L	108	117	127	140	165	178	190	203	229	356	394	457	533
b	11.5	13	14.5	16	17.5	19.5	22.5	24	24	24	25.5	29	30.5
n-φd	4-φ16	4-φ16	4-φ16	4-φ16	4-φ16	4-φ19	4-φ19	4-φ19	4-φ19	8-φ22	8-φ22	8-φ22	12-φ25

主要外形及连接法兰尺寸 ANSI-300#
Main Outline and Connecting Flange Size

MEDLE	DN15	DN20	DN25	DN32	DN40	DN50	DN65	DN80	DN100	DN125	DN150	DN200	DN250
G	1/2"	3/4"	1"	1-1/4"	1-1/2"	2"	2-1/2"	3"	4"	5"	6"	8"	10"
D3	15	20	25	30	40	50	65	80	100	125	150	200	250
D2	34.9	42.9	50.8	63.5	73	92.1	104.8	127	157.2	185.7	215.9	269.9	323.8
D1	66.7	82.6	88.9	98.4	114.3	127	149.2	168.3	200	235	269.9	330.2	387.4
D	95	115	125	135	155	165	190	210	255	280	320	380	445
L	140	152	165	178	190	216	241	282	305	381	403	502	568
b	14.5	16	17.5	19.5	21	22.5	25.5	29	32	35	37	41.5	48
n-φd	4-φ16	4-φ19	4-φ19	4-φ19	4-φ22	8-φ19	8-φ22	8-φ22	8-φ22	8-φ22	12-φ22	12-φ25	16-φ29

主要外形及连接法兰尺寸 ANSI-600#
Main Outline and Connecting Flange Size

MEDLE	DN15	DN20	DN25	DN32	DN40	DN50	DN65	DN80	DN100	DN125	DN150	DN200	DN250
G	1/2"	3/4"	1"	1-1/4"	1-1/2"	2"	2-1/2"	3"	4"	5"	6"	8"	10"
D3	15	20	25	30	40	50	65	80	100	125	150	200	250
D2	34.9	42.9	50.8	63.5	73	92.1	104.8	127	157.2	185.7	215.9	269.9	323.8
D1	66.7	82.6	88.9	98.4	114.3	127	149.2	168.3	215.9	266.7	292.1	349.2	431.8
D	95	115	125	135	155	165	190	210	275	330	355	420	510
L	165	190	216	229	241	292	330	356	432	508	559	660	787
b	21	23	24	27.5	29	32	35	38.5	45	51.5	54.5	62	70
n-φd	4-φ16	4-φ19	4-φ19	4-φ19	4-φ22	8-φ19	8-φ22	8-φ22	8-φ25	8-φ29	12-φ29	12-φ32	16-φ35

*注：系列球阀结构长度及连接法兰尺寸可根据用户要求设计制造。
根据不同的扭矩、介质，适配的执行器型号及尺寸可能有所不同。
以上执行器配置数据均采集自软密封(F, N, P)阀门，硬密封阀门的配置及数据请咨询本公司。

Note: The structural length and connecting flange size of ball valve series can be made to order.
The actuator model vary with different output torque and medium.
Above data are all on basis of soft-sealed valves(F, N, P), contact COVNA for hard-sealed valves data.

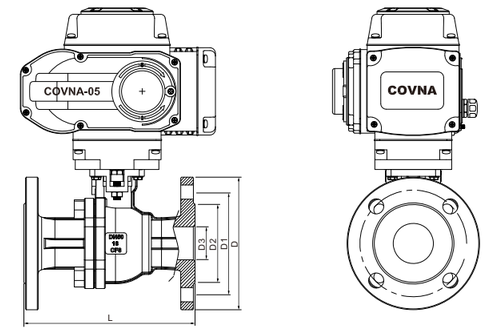

主要外形及连接法兰尺寸 JIS-10K
Main Outline and Connecting Flange Size

MEDLE	DN15	DN20	DN25	DN32	DN40	DN50	DN65	DN80	DN100	DN125	DN150	DN200	DN250
G	1/2"	3/4"	1"	1-1/4"	1-1/2"	2"	2-1/2"	3"	4"	5"	6"	8"	10"
D3	15	20	25	30	40	50	65	80	100	125	150	200	250
D2	52	58	70	80	85	100	120	130	155	185	215	265	325
D1	70	75	90	100	105	120	140	150	175	210	240	290	355
D	95	100	125	135	140	155	175	185	210	250	280	330	400
L	108	117	127	140	165	178	190	203	229	330/356	340/394	450/457	533
b	12	14	14	16	16	16	18	18	18	20	22	22	24
n-φd	4-φ15	4-φ15	4-φ19	4-φ19	4-φ19	4-φ19	4-φ19	8-φ19	8-φ19	8-φ23	8-φ23	12-φ23	12-φ25

主要外形及连接法兰尺寸 JIS-20K
Main Outline and Connecting Flange Size

MEDLE	DN15	DN20	DN25	DN32	DN40	DN50	DN65	DN80	DN100	DN125	DN150	DN200	DN250
G	1/2"	3/4"	1"	1-1/4"	1-1/2"	2"	2-1/2"	3"	4"	5"	6"	8"	10"
D3	15	20	25	30	40	50	65	80	100	125	150	200	250
D2	52	58	70	80	85	100	120	135	160	195	230	275	345
D1	70	75	90	100	105	120	140	160	185	225	260	305	380
D	95	100	125	135	140	155	175	200	225	270	305	350	430
L	140	152	165	178	190	216	241	282	305	381	403	502	568
b	14	16	16	18	18	18	20	22	24	26	28	30	34
n-φd	4-φ15	4-φ15	4-φ19	4-φ19	4-φ19	8-φ19	8-φ19	8-φ23	8-φ23	8-φ25	12-φ25	12-φ25	12-φ27

*注：
系列球阀结构长度及连接法兰尺寸可根据用户要求设计制造。
根据不同的扭矩、介质，适配的执行器型号及尺寸可能有所不同。
以上执行器配置数据均采集自软密封(F, N, P)阀门，硬密封阀门的配置及数据请咨询本公司。

Note:
The structural length and connecting flange size of ball valve series can be made to order.
The actuator model vary with different output torque and medium.
Above data are all on basis of soft-sealed valves(F, N, P), contact COVNA for hard-sealed valves data.

HK60-Q-2PS-F 电动不锈钢法兰球阀 德标

Electric 2-Way Flanged Ball Valve DIN

主要外形及连接法兰尺寸 DIN-PN(16bar)
Main Outline and Connecting Flange Size

MEDLE	DN15	DN20	DN25	DN32	DN40	DN50	DN65	DN80	DN100	DN125	DN150	DN200
G	1/2"	3/4"	1"	1-1/4"	1-1/2"	2"	2-1/2"	3"	4"	5"	6"	8"
D3	15	20	25	30	40	50	65	80	100	125	150	200
D2	45	58	68	78	85	102	122	138	158	188	212	268
D1	65	75	85	100	110	125	145	160	180	210	240	295
D	95	105	115	140	150	165	185	200	220	250	285	340
L	115	120	125	130	140	150	170	180	190	325	350	400
b	16	18	18	18	18	20	20	20	20	22	22	24
n-φd	4-φ14	4-φ14	4-φ14	4-φ18	4-φ18	4-φ18	4-φ18	8-φ18	8-φ18	8-φ18	8-φ22	12-φ22

主要外形及连接法兰尺寸 DIN-PN(25bar)
Main Outline and Connecting Flange Size

MEDLE	DN15	DN20	DN25	DN32	DN40	DN50	DN65	DN80	DN100	DN125	DN150	DN200
G	1/2"	3/4"	1"	1-1/4"	1-1/2"	2"	2-1/2"	3"	4"	5"	6"	8"
D3	15	20	25	30	40	50	65	80	100	125	150	200
D2	45	58	68	78	88	102	122	138	162	188	218	278
D1	65	75	85	100	110	125	145	160	190	220	250	310
D	95	105	115	140	150	165	185	200	235	270	300	360
L	115	120	125	130	140	150	170	180	190	325	350	400
b	16	18	18	18	18	20	22	24	24	26	28	30
n-φd	4-φ14	4-φ14	4-φ14	4-φ18	4-φ18	4-φ18	8-φ18	8-φ18	8-φ 22	8-φ26	8-φ26	12-φ 26

主要外形及连接法兰尺寸 DIN-PN(40bar)
Main Outline and Connecting Flange Size

MEDLE	DN15	DN20	DN25	DN32	DN40	DN50	DN65	DN80	DN100	DN125	DN150	DN200
G	1/2"	3/4"	1"	1-1/4"	1-1/2"	2"	2-1/2"	3"	4"	5"	6"	8"
D3	15	20	25	30	40	50	65	80	100	125	150	200
D2	45	55	65	78	85	100	120	135	160	188	218	282
D1	65	75	85	100	110	125	145	160	190	220	250	320
D	95	105	115	135	145	160	180	195	230	270	300	375
L	115	120	125	130	140	150	170	180	190	325	350	400
b	16	18	18	18	18	20	22	24	24	26	28	30
n-φd	4-φ14	4-φ14	4-φ14	4-φ18	4-φ18	4-φ18	8-φ18	8-φ18	8-φ23	8-φ25	8-φ25	12-φ34

*注：系列球阀结构长度及连接法兰尺寸可根据用户要求设计制造。
根据不同的扭矩、介质，适配的执行器型号及尺寸可能有所不同。
以上执行器配置数据均采集自软密封(F, N, P)阀门，硬密封阀门的配置及数据请咨询本公司。

Note: The structural length and connecting flange size of ball valve series can be made to order.
The actuator model vary with different output torque and medium.
Above data are all on basis of soft-sealed valves(F, N, P), contact COVNA for hard-sealed valves data.

HK60-Q-3PS 电动三片式球阀

Electric 3-PCS Ball Valve

技术规范 Technical Parameter

设计依据 Design Basis	GB	ANSI
设计标准 Design Standard	GB/12237	ANSI B16.34
试验和检验 Test & Inspection	JB/T9092	API 598

※注：系列球阀结构长度及连接法兰尺寸可根据用户要求设计制造。
Note: The structural length and connecting flange size of ball valve series can be designed and manufactured as per users'requirments.


HK60-Q-3PS


HK60-Q-3PS-H


HK60-Q-3PS-K


HK60-Q-3PS-F

主要零件材质表 Main Parts Materials

序号 No.	零件名称 Name	材质 Material
1	螺栓 Screw	不锈钢304 Stainless Steel 304
2	接头 Connector	不锈钢CF8、CF8M、Cf3、CF3M Stainless Steel Cf8、CF8M、CF3、CF3M
3	阀座 Seat	PTFE、尼龙(Nylon)、对位聚苯(PPL) 硬质合金(H/Y)
4	球体 Ball	不锈钢304、304L、316、316L Stainless Steel 304、304L、316、316L
5	阀体 Body	不锈钢CF8、CF8M、Cf3、CF3M Stainless Steel Cf8、CF8M、CF3、CF3M
6	螺母 Nut	不锈钢304 Stainless Steel 304
7	阀杆 Stem	不锈钢304、304L、316、316L Stainless Steel 304、304、316、316L
8	垫片 Gasket	不锈钢304、316L Stainless Steel 304、316L
9	填料 Packing	PTFE
10	压盖 Gland	不锈钢304、316L Stainless Steel 304、316L
11	连接支架 Connecting Yoke	不锈钢CF8 Stainless Steel CF8
12	连接套 Connecting Set	不锈钢304 Stainless Steel 304
13	螺栓 Screw	不锈钢304 Stainless Steel 304
14	手动装置 Hand Gear	塑料 Plastic
15	电动装置 Electric Actuator	开关型、调节型、多回转型、防爆型 ON/OFF、Regulation 、Multi-Turn、Explosion-Proof

※注：系列球阀主要零部件及密封圈的材质可根据实际工况条件或用户特殊要求设计选用。
Note: The main spare parts and sealing-ring materials of ball valve series can be designed for options as per real working conditions and users'special requirements.

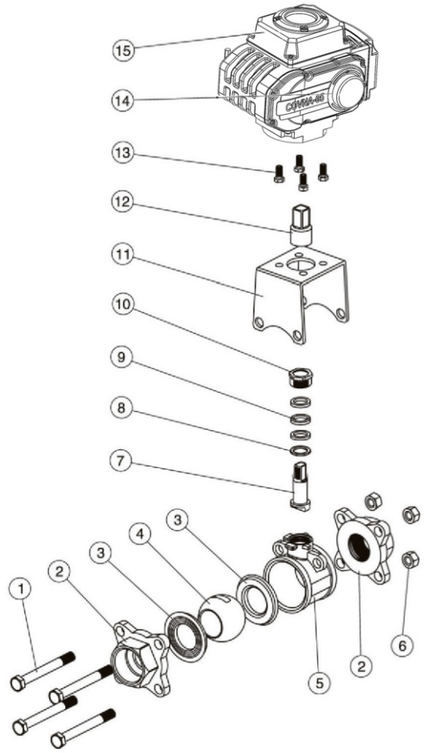

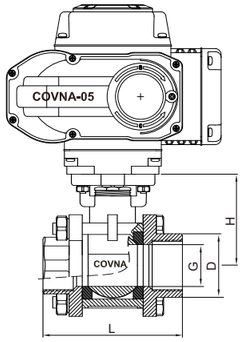

螺纹型 Threaded Type

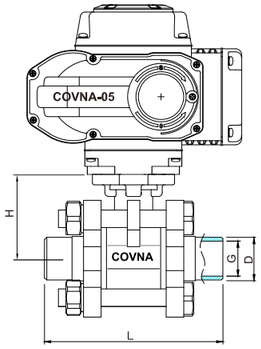

焊接型 Welded Type

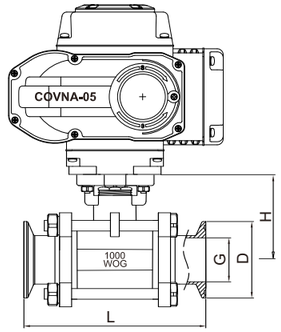

卡箍型 Clamped Type

螺纹型主要外形及连接尺寸
Threaded Type Main Outline and Connecting Size

SIZE	DN08	DN10	DN15	DN20	DN25	DN32	DN40	DN50	DN65	DN80	DN100
G	1/4"	3/8"	1/2"	3/4"	1"	1-1/4"	1-1/2"	2"	2-1/2"	3"	4"
D	11.2	12.5	15	20	25	32	40	50	65	80	100
L	60	60	72	82	90	112	120	145	185	210	268
H	42	42	42	48.5	58.5	63	71	78	100	109	140

对焊型主要外形及连接尺寸
Welded Type Main Outline and Connecting Size

SIZE	DN08	DN10	DN15	DN20	DN25	DN32	DN40	DN50	DN65	DN80	DN100
G	1/4"	3/8"	1/2"	3/4"	1"	1-1/4"	1-1/2"	2"	2-1/2"	3"	4"
D	12. 5	17. 5	22	27	34	42. 5	48. 5	61	73	90	115
L	65	65	75	83	90	113	115	140	160	180	215
H	33	34	38	45	55	60	70	85	100	112	140

卡箍型主要外形及连接尺寸
Clamped Type Main Outline and Connecting Size

SIZE	DN15	DN20	DN25	DN32	DN40	DN50	DN65	DN80	DN100
G	1/2"	3/4"	1"	1-1/4"	1-1/2"	2"	2-1/2"	3"	4"
D	34/50.5	34/50.5	50.5	50.5	50.5	64	77/91	91/106	119
L	100	100	120	130	140	156	196	228	242
H	55	60	70	82	90	105	120	132	158

*注：系列球阀结构长度及连接法兰尺寸可根据用户要求设计制造。
根据不同的扭矩、介质，适配的执行器型号及尺寸可能有所不同。
以上执行器配置数据均采集自软密封(F, N, P)阀门，硬密封阀门的配置及数据请咨询本公司。

Note: The structural length and connecting flange size of ball valve series can be made to order.
The actuator model vary with different output torque and medium.
Above data are all on basis of soft-sealed valves(F, N, P), contact COVNA for hard-sealed valves data.

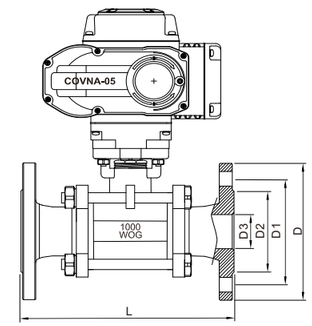

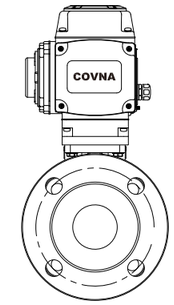

法兰型主要外形及连接法兰尺寸 GB-PN16
Flange Type Main Outline and Connecting Flange Size

MEDLE	DN15	DN20	DN25	DN32	DN40	DN50	DN65	DN80	DN100	DN125	DN150
G	1/2"	3/4"	1"	1-1/4"	1-1/2"	2"	2-1/2"	3"	4"	5"	6"
D3	15	20	25	30	40	50	65	80	100	125	150
D2	45	58	65	78	88	102	122	138	158	185	210
D1	65	75	85	100	110	125	145	160	180	210	240
D	95	105	115	140	150	165	185	200	220	250	285
L	130	150	160	180	200	230	250/290	280/310	320/350	400	480
n-φd	4-ϕ14	4-ϕ14	4-ϕ14	4-ϕ18	4-ϕ18	4-ϕ18	4-ϕ18	4-ϕ18	8-ϕ18	8-ϕ18	8-ϕ23

法兰型主要外形及连接法兰尺寸 ANSI-Class150
Flange Type Main Outline and Connecting Flange Size

MEDLE	DN15	DN20	DN25	DN32	DN40	DN50	DN65	DN80	DN100	DN125	DN150
G	1/2"	3/4"	1"	1-1/4"	1-1/2"	2"	2-1/2"	3"	4"	5"	6"
D3	15	20	25	30	40	50	65	80	100	125	150
D2	34.9	42.9	50.8	63.5	73	92.1	104.8	127	157.2	185.7	215.9
D1	60.4	69.9	79.4	88.9	98.4	120.7	139.7	152.4	190.5	215.9	241.3
D	89	98	108	117	127	152	178	190	229	255	280
L	130	150	160	180	200	230	250/290	280/310	320/350	400	480
n-φ d	4-ϕ16	4-ϕ16	4-ϕ16	4-ϕ16	4-ϕ16	4-ϕ19	4-ϕ19	4-ϕ19	8-ϕ19	8-ϕ22	8-ϕ22

*注：系列球阀结构长度及连接法兰尺寸可根据用户要求设计制造。
根据不同的扭矩、介质，适配的执行器型号及尺寸可能有所不同。
以上执行器配置数据均采集自软密封(F, N, P)阀门，硬密封阀门的配置及数据请咨询本公司。

Note: The structural length and connecting flange size of ball valve series can be made to order.
The actuator model vary with different output torque and medium.
Above data are all on basis of soft-sealed valves(F, N, P), contact COVNA for hard-sealed valves data.

HK60-Q-2PS 电动两片式内螺纹球阀

Electric 2-PCS Threaded Ball Valve

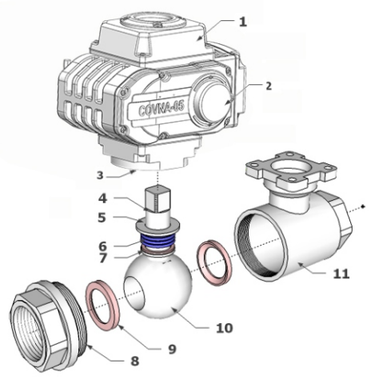

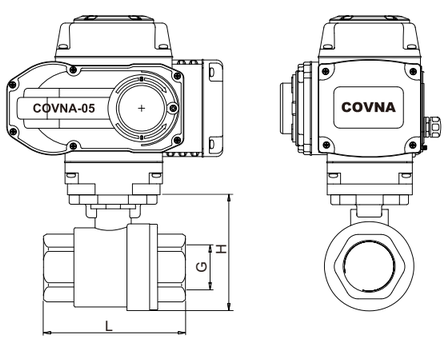

技术规范 Technical Parameter

设计依据 Design Basis	GB	ANSI
设计标准 Design Standard	GB/12237	ANSI B16.34
试验和检验 Test & Inspection	JB/T9092	API 598

※注：系列球阀结构长度及连接法兰尺寸可根据用户要求设计制造。
Note: The structural length and connecting flange size of ball valve series can be designed and manufactured as per users'requirments.

主要零件材质表 Main Parts Materials

序号 No.	零件名称 Name	材质 Material
1	电动装置 Electric Actuator	开关型、调节型、多回转型、防爆型 ON/OFF、Regulation 、Multi-Turn、Explosion-Proof
2	手动装置 Hand Gear	塑料 Plastic
3	连接套 Connecting Set	不锈钢304 Stainless Steel 304
4	阀杆 Stem	不锈钢304、304L、316、316L Stainless Steel 304、304、316、316L
5	垫片 Gasket	不锈钢304、316L Stainless Steel 304、316L
6	填料 Packing	PTFE
7	压盖 Gland	不锈钢304、316L Stainless Steel 304、316L
8	左阀体 Body	不锈钢CF8、CF8M、Cf3、CF3M Stainless Steel Cf8、CF8M、CF3、CF3M
9	阀座 Seat	PTFE、尼龙(Nylon)、对位聚苯(PPL) 硬质合金(H/Y)
10	球体 Ball	不锈钢304、304L、316、316L Stainless Steel 304、304L、316、316L
11	右阀体 Body	不锈钢CF8、CF8M、Cf3、CF3M Stainless Steel Cf8、CF8M、CF3、CF3M

※注：系列球阀主要零部件及密封圈的材质可根据实际工况条件或用户特殊要求设计选用。
Note: The main spare parts and sealing-ring materials of ball valve series can be designed for options as per real working conditions and users'special requirements.

主要外形及连接法兰尺寸 Main Outline and Connecting

MEDLE	DN08	DN10	DN15	DN20	DN25	DN32	DN40	DN50	DN65	DN80	DN100
G	1/4"	3/8"	1/2"	3/4"	1"	1-1/4"	1-1/2"	2"	2-1/2"	3"	4"
D	8	10	15	20	25	32	40	50	65	80	100
L	55	55	55	73	84	98	106	121	160	180	220
H	30	30	37	40	49	53	62	70	93	106	126

HK60-Q-W 电动二通卫生级球阀

Electric 2-Way Sanitary Ball Valve

技术规范 Technical Parameter

设计依据 Design Basis	GB	ANSI
设计标准 Design Standard	GB/12237	ANSI B16.34
试验和检验 Test & Inspection	JB/T9092	API 598

※注：系列球阀结构长度及连接法兰尺寸可根据用户要求设计制造。
Note: The structural length and connecting flange size of ball valve series can be designed and manufactured as per users'requirments.

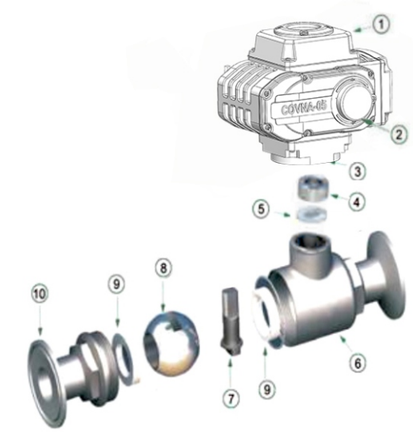

主要零件材质表 Main Parts Materials

序号 No.	零件名称 Name	材质 Material
1	电动装置 Electric Actuator	开关型、调节型、多回转型、防爆型 ON/OFF、Regulation 、Multi-Turn、Explosion-Proof
2	手动装置 Hand Gear	塑料 Plastic
3	连接套 Connecting Set	不锈钢304 Stainless Steel 304
4	填料 Packing	PTFE
5	O型环 O-Ring	EPDM/PPM
6	右阀体 Body	不锈钢CF8、CF8M、Cf3、CF3M Stainless Steel Cf8、CF8M、CF3、CF3M
7	阀杆 Stem	不锈钢304、316、316L Stainless Steel 304、316、316L
8	球体 Ball	不锈钢304、304L、316、316L Stainless Steel 304、304L、316、316L
9	阀座 Seat	PTFE、尼龙(Nylon)、对位聚苯(PPL) 硬质合金(H/Y)
10	左阀体 Body	不锈钢304、304L、316、316L Stainless Steel 304、304L、316、316L

※注：系列球阀主要零部件及密封圈的材质可根据实际工况条件或用户特殊要求设计选用。
Note: The main spare parts and sealing-ring materials of ball valve series can be designed for options as per real working conditions and users'special requirements.

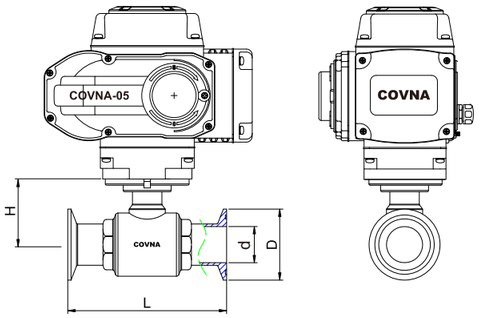

主要外形及连接法兰尺寸 Main Outline and Connecting

Size	1/2"	3/4"	1"	1-1/4"	1-1/2"	1-3/4"	2"	2-1/4"	2-1/2"	3"	3-1/2"	4"
	Ø12.7	Ø19	Ø25	Ø32	Ø38	Ø45	Ø51	Ø57	Ø63	Ø76	Ø89	Ø102
d	12.7	16.5	22	28.5	35	41	47.5	52	58.2	72	84.8	98.3
D	25.4	50.5	50.5	50.5	50.5	64	64	77. 5	77.5	91	106	119
L	75	101	117	125	140	155	165	170	176	200	240	270
H	27	45	50	51	64	67	70	74	80	100	107	122

HK60-Q-G 电动二通高压球阀

Electric 2-Way High-Pressure Ball Valve

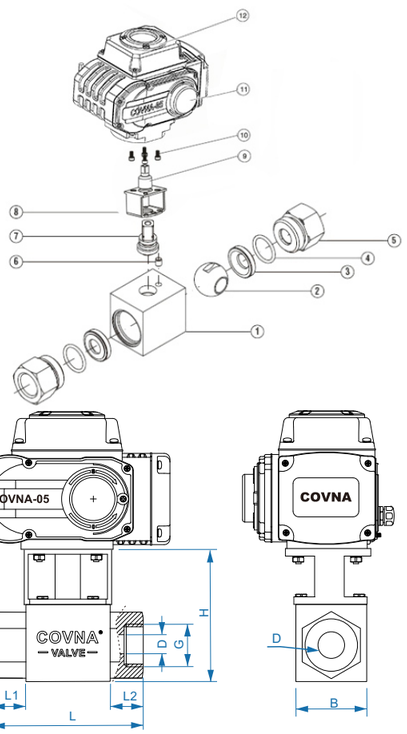

技术规范 Technical Parameter

设计依据 Design Basis	GB	ANSI
设计标准 Design Standard	GB/12237	ANSI B16.34
试验和检验 Test & Inspection	JB/T9092	API 598

※注：系列球阀结构长度及连接法兰尺寸可根据用户要求设计制造。
Note: The structural length and connecting flange size of ball valve series can be designed and manufactured as per users'requirments.

主要零件材质表 Main Parts Materials

序号 No.	零件名称 Name	材质 Material
1	主阀体 Body	不锈钢304、304L、316、316L Stainless Steel 304、304L、316、316L
2	球体 Ball	不锈钢304、304L、316、316L Stainless Steel 304、304L、316、316L
3	阀座 Seat	PTFE、尼龙(Nylon)、对位聚苯(PPL)
4	O型环 O-Ring	PTFE
5	分阀体 Body	不锈钢CF8、CF8M、Cf3、CF3M Stainless Steel Cf8、CF8M、CF3、CF3M
6	圆柱销 Cylindrical Pin	不锈钢304、316 Stainless Steel 304、316
7	阀杆 Stem	不锈钢304、316、316L Stainless Steel 304、316、316L
8	连接支架 Connecting Yoke	不锈钢304、316 Stainless Steel 304、316
9	连接套 Connecting Set	不锈钢304、316 Stainless Steel 304、316
10	Screw 螺栓	不锈钢304、316 Stainless Steel 304、316
11	手动装置 Hand Gear	塑料 Plastic
12	电动装置 Electric Actuator	开关型、调节型、多回转型、防爆型 ON/OFF、Regulation 、Multi-Turn、Explosion-Proof

※注：系列球阀主要零部件及密封圈的材质可根据实际工况条件或用户特殊要求设计选用。
Note: The main spare parts and sealing-ring materials of ball valve series can be designed for options as per real working conditions and users'special requirements.

主要外形及连接尺寸 20MPA
Main Outline and Connecting Flange Size

MEDLE	DN08	DN10	DN15	DN20	DN25	DN32	DN40	DN50
G	1/4"	3/8"	1/2"	3/4"	1"	1-1/4"	1-1/2"	2"
D	6	8	10	14.6	19.6	24.8	30	39.6
B	45	45	45	55	66	77	95	
H	43	43	43	53	64	70	79	
L	80	80	82	101	120	127	150	
L1	19	19	20	25	29	30	28	
L2	19	19	20	25	29	30	28	

HK60-Q-B 电动薄型球阀

Electric Wafer Thin Ball Valve

技术规范 Technical Parameter

设计依据 Design Basis	GB
设计标准 Design Standard	GB/12237
连接法兰尺寸 Connecting Flange Size	GB/9113 JB/T79
试验和检验 Test & Inspection	JB/T9092

※注：系列球阀结构长度及连接法兰尺寸可根据用户要求设计制造。
Note: The structural length and connecting flange size of ball valve series can be designed and manufactured as per users'requirments.

主要零件材质表 Main Parts Materials

序号 No.	零件名称 Name	材质 Material
1	主阀体 Body	不锈钢304、304L、316、316L Stainless Steel 304、304L、316、316L
2	球体 Ball	不锈钢304、304L、316、316L Stainless Steel 304、304L、316、316L
3	阀座 Seat	PTFE、尼龙(Nylon)、对位聚苯(PPL)
4	O型环 O-Ring	PTFE
5	填料 Packing	PTFE
6	阀杆 Stem	不锈钢304、316、316L Stainless Steel 304、316、316L
7	连接套 Connecting Set	不锈钢304、316 Stainless Steel 304、316
8	Screw 螺栓	不锈钢304、316 Stainless Steel 304、316
9	手动装置 Hand Gear	塑料 Plastic
10	电动装置 Electric Actuator	开关型、调节型、多回转型、防爆型 ON/OFF、Regulation 、Multi-Turn、Explosion-Proof

※注：系列球阀主要零部件及密封圈的材质可根据实际工况条件或用户特殊要求设计选用。
Note: The main spare parts and sealing-ring materials of ball valve series can be designed for options as per real working conditions and users'special requirements.

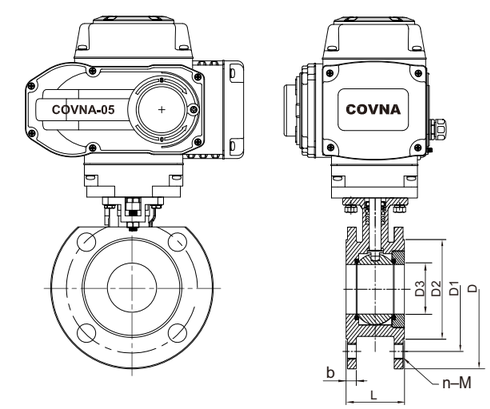

主要外形及连接法兰尺寸 1.6MPA
Main Outline and Connecting Flange Size

MEDLE	DN25	DN32	DN40	DN50	DN65	DN80	DN100
G	1"	1-1/4"	1-1/2"	2"	2-1/2"	3"	4"
D3	23.5	31	36	44	55	70	88
D2	68	76	90	103	123	138	159
D1	85	100	110	125	145	160	180
D	98.5	135	128	142	158	187	206
L	44	53	63	72	95	120	139
b	16	16	18	18	18	21	21
n-M	4-M10	4-M14	4-M14	4-M14	4-M14	8-M14	8-M14

技术规范 Technical Parameter

设计依据 Design Basis	GB	ANSI
设计标准 Design Standard	GB/12237	ANSI B16.34
连接法兰尺寸 Connecting Flange Size	GB/9113 JB/T79	ANSI B16.5
试验和检验 Test & Inspection	JB/T9092	API 598

※注：系列球阀结构长度及连接法兰尺寸可根据用户要求设计制造。
Note: The structural length and connecting flange size of ball valve series can be designed and manufactured as per users'requirments.

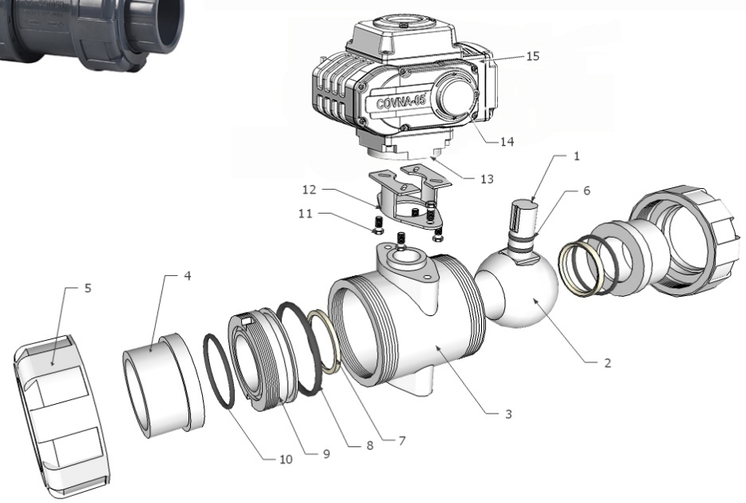

主要零件材质表 Main Parts Materials

序号 No.	零件名称	Component	材质 Material
1	阀杆	Stem	SS304、304L、316、316L
2	球体	Ball	PVC/CPVC/PPG/PPHABS
3	阀体	Body	PVC/CPVC/PPG/PPHABS
4	接管	Endconnector	PVC/CPVC/PPG/PPH/ABS
5	锁母	Union Nut	PVC/CPVC/PPG/PPH/ABS
6	O型环	O-Ring	PTFE
7	球密封	Seat Seal	EPDM/VITON
8	密封支架	SEAL CARRIER	PVC/CPVC/PPG/PPH/ABS
9	阀座	Seat	PVC/CPVC/PPG/PPH/ABS
10	O型环	O-Ring	EPDM/FPM
11	螺栓	Screw	不锈钢304 SS304
12	连接支架	Connecting Yoke	不锈钢304 SS304
13	连接套	Connecting Set	不锈钢304 SS304
14	电动装置	Electric Actuator	开关型、调节型、多回转型、防爆型 ON/OFF、Regulation 、Multi-Turn、Explosion-Proof

※注：系列球阀主要零部件及密封圈的材质可根据实际工况条件或用户特殊要求设计选用。
Note: The main spare parts and sealing-ring materials of ball valve series can be designed for options as per real working conditions and users'special requirements.

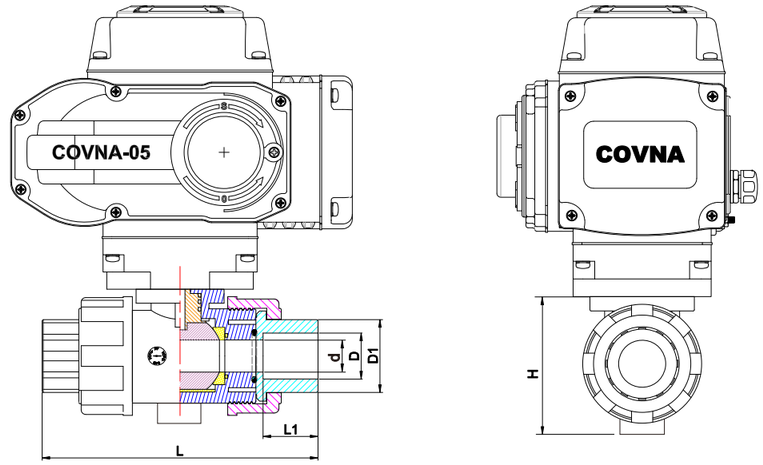

主要外形及连接尺寸 PN16(1.6MPa)
Main Outline and Connecting Flange Size

MEDLE		DN15	DN20	DN25	DN32	DN40	DN50	DN65	DN80	DN100	DN125	DN150	DN200
G		1/2"	3/4"	1"	1-1/4"	1-1/2"	2"	2-1/2"	3"	4"	5"	6"	8"
DIN	d	16	20	25	30	38	50	63	78	100	125	150	200
	D	20	25	32	40	50	63	75	90	110	141.3	168.3	225
ANSI	d	16	20	25	30	38	50	63	78	100	125	150	200
	D	21.3	26.7	33.4	42.2	48.3	60.3	73	88.9	114.3	141.3	168.3	219
JIS	d	16	20	25	30	38	50	63	78	100	125	150	200
	D	22	26	32	38	48	60	76	89	114	140	165	216
UK	d	16	20	25	30	38	50	63	78	100	125	150	200
	D	22	26	34	42	48	60	76	89	114	140	165	216
D1		30	36	45	55	64	77	96	112	141			
L1		22. 8	25	28.5	32	34.8	39	46	48	64.5			
L		121. 8	134. 5	150.2	166.8	179	205	233	257	309			
H		61	74	90	104	121	146	169	220	255			

*注：
系列球阀结构长度及连接法兰尺寸可根据用户要求设计制造。
根据不同的扭矩、介质，适配的执行器型号及尺寸可能有所不同。
以上执行器配置数据均采集自软密封(F, N, P)阀门，硬密封阀门的配置及数据请咨询本公司。
Note:
The structural length and connecting flange size of ball valve series can be made to order.
The actuator model vary with different output torque and medium.
Above data are all on basis of soft-sealed valves(F, N, P), contact COVNA for hard-sealed valves data.

技术规范 Technical Parameter

设计依据 Design Basis	GB	ANSI
设计标准 Design Standard	GB/12237	ANSI B16.34
连接法兰尺寸 Connecting Flange Size	GB/9113 JB/T79	ANSI B16.5
试验和检验 Test & Inspection	JB/T9092	API 598

※注：系列球阀结构长度及连接法兰尺寸可根据用户要求设计制造。
Note: The structural length and connecting flange size of ball valve series can be designed and manufactured as per users'requirments.

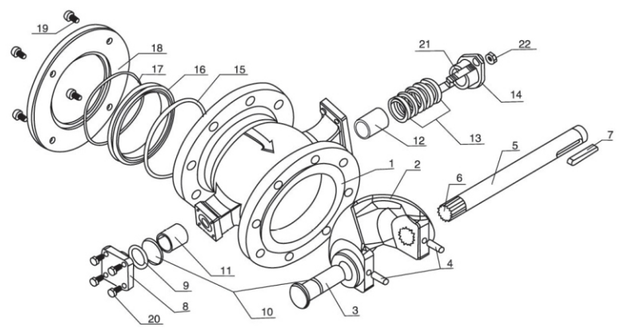

主要零件材质表 Main Parts Materials

序号 No.	零件名称	Component	数量 Qty	材质 Material
1	阀体	Body	1	WCB、CF8、CF8M、CF3、CF3M
2	球体	Ball	1	CF8、CF8M+镀硬铬或超音速喷涂
3	后阀杆	After Steam	1	17-4PH、SS316
4	圆柱销	Cylindrical Pin	1	SS304、S3316
5	前阀杆	Before Steam	2	17-4PH、SS316
6	花键	Spline	1	17-4PH、SS316
7	平键	Flat Key	1	SS304、45#
8	后压键	After Gland	1	CF8、CF8M
9	O形圈	O-Ring	1	氟橡胶 Viton
10	调整垫	Adjust Pad	各1	PTFE
11	自润滑轴承	Self-Lubricating Bearings	1	复合材料 Composite Material
12	自润滑轴承	Self-Lubricating Bearings	1	复合材料 Composite Material
13	填料	Packing	1组	PTFE
14	填料压盖	Packing Gland	1	CF8
15	O形圈	O-Ring	1	氟橡胶 Viton
16	密封座	Seal Block	1	PTFE、CF8、CF8M+镀硬铬或超音速喷涂
17	密封座弹簧	Seal Block Spring	1	SS316
18	密封座盖	Sealing Lid	1	Q235、SS304、S3316
19	内六角螺钉	Inner Hexagon Screw		SS304
20	六角螺钉	Hexagon Screw	4	SS304

※注：系列球阀主要零部件及密封圈的材质可根据实际工况条件或用户特殊要求设计选用。
Note: The main spare parts and sealing-ring materials of ball valve series can be designed for options as per real working conditions and users'special requirements.

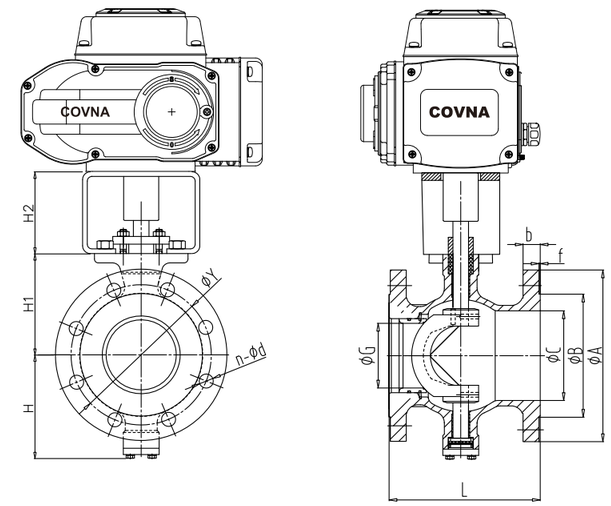

主要外形及连接法兰尺寸 – 1.6Mpa
Main Outline and Connecting Flange Size

MEDLE	DN25	DN32	DN40	DN50	DN65	DN80	DN100	DN125	DN150	DN200
Inch	1"	1-1/4"	1-1/2"	2"	2-1/2"	3"	4"	5"	6"	8"
A	115	140	150	165	185	200	220	250	285	340
B	65	76	84	99	118	132	156	184	211	266
C	38	45	50	62	73	90	115	134	164	206
G	20	25	32	40	55	62	80	100	125	155
Y	85	100	110	125	145	160	180	210	240	295
b	16	18	18	20	20	20	22	22	24	24
f	2	2	2	2	2	2	2	2	2	2
n-φ d	4-ϕ14	4-ϕ18	4-ϕ18	4-ϕ18	8-ϕ18	8-ϕ18	8-ϕ18	8-ϕ18	8-ϕ22	12-ϕ22
L	102	102	114	124	145	165	194	194	229	243
H	81	86	90	93	108	123	138	128	170	200
H1	178	183	185	195	210	223	235	250	270	320
H2	28	30	30	26	28	31	33	25	31	31

*注：
系列球阀结构长度及连接法兰尺寸可根据JB/T79标准或要求设计制造。
根据不同的扭矩、介质，适配的执行器型号及尺寸可能有所不同。
以上执行器配置数据均采集自软密封(F, N, P)阀门，硬密封阀门的配置及数据请咨询本公司。

Note:
JB/T79 standard accepted.
The actuator model vary with different output torque and medium.
Above data are all on basis of soft-sealed valves(F, N, P), contact COVNA for hard-sealed valves data.

HK60-Q-F-C 电动衬氟法兰球阀

Electric PTFE-Lined Flanged Ball Valve

技术规范 Technical Parameter

设计依据 Design Basis		API, ANSI
设计标准 Design Standard		API 6D, ANSI B16.34
结构长度 Face To Face Dimension	法兰连接 Flange Connecting	API 6D, ANSI B16.10
连接法兰尺寸 Connecting Flange Size		ANSI B16.5
试验和检验 Test & Inspection		API 6D, API 598

※注：系列球阀结构长度及连接法兰尺寸可根据用户要求设计制造。
Note: The structural length and connecting flange size of ball valve series can be designed and manufactured as per users'requirments.

主要零件材质表 Main Parts Materials

序号 No.	零件名称 Name	材质 Material
1	主阀体 Body	铸铁、铸钢、不锈钢 Cast Iron, WCB, Stainless Steel
2	球体 Ball	铸铁、铸钢、不锈钢 Cast Iron, WCB, Stainless Steel
3	内衬材料/阀座 Lining Material/Seat	PTFE
4	填料 Packing	PTFE
5	压盖 Cap	铸铁、铸钢、不锈钢 Cast Iron, WCB, Stainless Steel
6	阀杆 Stem	不锈钢304、316 Stainless Steel 304、316
7	连接套 Connecting Set	不锈钢304、316 Stainless Steel 304、316
8	Screw 螺栓	不锈钢304、316 Stainless Steel 304、316
9	手动装置 Hand Gear	塑料 Plastic
10	电动装置 Electric Actuator	开关型、调节型、多回转型、防爆型 ON/OFF、Regulation 、Multi-Turn、Explosion-Proof

※注：系列球阀主要零部件及密封圈的材质可根据实际工况条件或用户特殊要求设计选用。
Note: The main spare parts and sealing-ring materials of ball valve series can be designed for options as per real working conditions and users'special requirements.

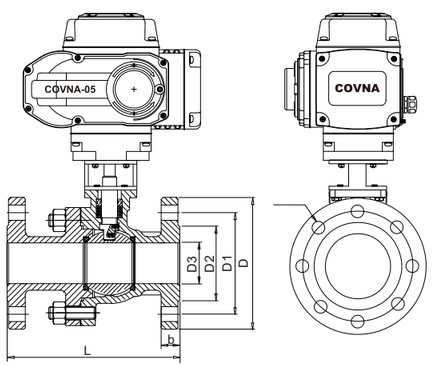

主要外形及连接法兰尺寸 1.6MPa
Main Outline and Connecting Flange Size

MEDLE	DN15	DN20	DN25	DN32	DN40	DN50	DN65	DN80	DN100	DN125	DN150	DN200
Inch	1/2"	3/4"	1"	1-1/4"	1-1/2"	2"	2-1/2"	3"	4"	5"	6"	8"
D3	15	20	25	30	40	50	65	80	100	125	150	200
D2	45	55	65	78	85	100	120	135	155	185	210	265
D1	65	75	85	100	110	125	145	160	180	210	240	295
D	95	105	115	135	145	160	180	195	215	245	280	335
b	14	16	16	18	18	20	20	22	22	24	24	26
L	140	140	150	165	180	200	220	250	280	320	360	400
n-φd	4-ϕ14	4-ϕ14	4-ϕ14	4-ϕ18	4-ϕ18	4-ϕ18	4-ϕ18	4/8-ϕ18	8-ϕ18	8-ϕ18	8-ϕ23	12-ϕ23

HK60-Q-TF 电动三通法兰球阀

Electric 3-Way Flanged Ball Valve

电动三通球阀，是由角行程的电动执行机构和三通球阀组成，用于实现管道介质的换向，控制管道中的介质合流和分流，也可使三个通道相互连通，现时也可关闭任一通道，使另外两个通道连通，灵活控制管路中介质的合流或分流具有结构紧凑，重量轻，密封性能好，维修方便等优点。

电动三通球阀适用于供水、石化、冶金、矿山、轻纺、能源、造纸、食品、钢铁等管路系统中对介质流向进行切换以及对介质的分流或混合流体。

The electric 3-way ball valve is composed of a quarter-turn electric actuator and a 3-way ball valve. It is used to change the flow direction in the pipeline, and normally for diverting or mixing the pipeline fluid. It has the advantages of compact structure, light weight, good sealing performance and convenient maintenance.

Electric 3-way ball valve is popular-used in water supply, petrochemical, metallurgy, mining, light textile, energy, paper-making, food-processing, steel, etc.

三通球阀介质流向示意图 Flow Direction Diagram of Three-Way Ball Valve

三通球阀分L型和T型，介质流通方向见下图。L型适用于介质流向的切换，能使相互垂直的两个通道连通：T型适用于介质的分流、合流或流向切换，T型孔道可以使三个通道互相连通或使其中两个通道连通。

three-way ball valve is divided into L type and T type, the flow direction of the medium is shown in the figure below. L type is suitable for medium flow switching and can connect two mutually perpendicular channels: T type is suitable for medium diversion, merging or flow direction switching. T-shaped channels can connect three channels or two of them.

T型三通球阀流向图
T-Pattern Flow Direction Diagram

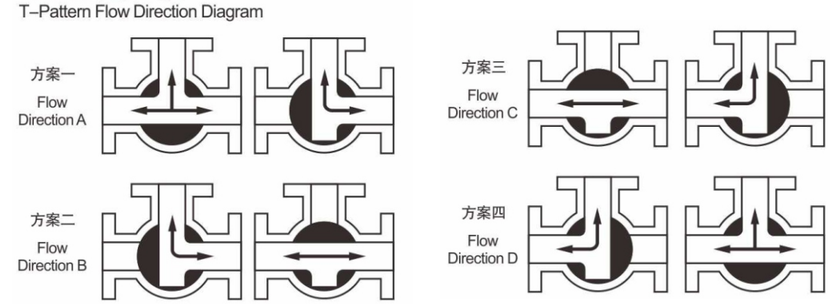

L型三通球阀流向图
L-Pattern Flow Direction Diagram

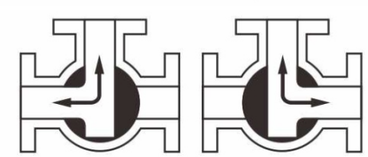

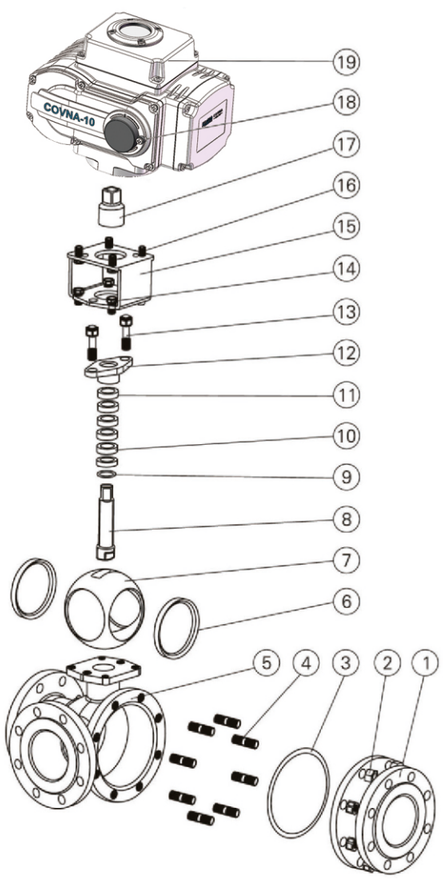

技术规范 Technical Parameter

设计依据 Design Basis	GB	ANSI
设计标准 Design Standard	GB/12237	ANSI B16.34
连接法兰尺寸 Connecting Flange Size	GB/9113 JB/T79	ANSI B16.5
试验和检验 Test & Inspection	JB/T9092	API 598

※注：系列球阀结构长度及连接法兰尺寸可根据用户要求设计制造。
Note: The structural length and connecting flange size of ball valve series can be designed and manufactured as per users'requirments.

主要零件材质表 Main Parts Materials

序号 No.	零件名称 Component	材质 Material C	P	R
1	右阀体 Right Valve	WCB	ZG1Cr18Ni9Ti	ZG1Cr18Ni12Mo2Ti
2	螺母 Nut	35	1Cr18Ni9Ti	1Cr18Ni9Ti
3	垫片 Gasket	PTFE、石墨金属复合垫 Graphite Metal Composite Pad		
4	螺栓 Screw	35	1Cr18Ni9Ti	1Cr18Ni9Ti
5	阀体 Body	WCB	ZG1Cr18Ni9Ti	ZG1Cr18Ni12Mo2Ti
6	阀座 Seat	PTFE、尼龙(Nylon)、对位聚苯(PPL) 硬质合金 Hard Alloy		
7	球体 Ball	1Cr18Ni9Ti	1Cr18Ni9Ti	1Cr1812Mo2Ti
8	阀杆 Stem	1Cr13	1Cr18Ni9Ti	1Cr1812Mo2Ti
9	垫片 Gacket	1Cr18Ni9Ti	1Cr18Ni9Ti	1Cr1812Mo2Ti
10	填料 Packing	PTFE 、柔 石墨 Flexible Graphite		
11	衬套 Bushing	PTFE复合轴承 Composite Beartings		
12	压盖 Gland	WCB	ZG1Cr18Ni9Ti	ZG1Cr18Ni12Mo2Ti
13	螺栓 Screw	35	1Cr18Ni9Ti	1Cr18Ni9Ti
14	螺栓 Screw	35	1Cr18Ni9Ti	1Cr18Ni9Ti
15	连接支架 Connecting Yoke	1Cr18Ni9Ti	1Cr18Ni9Ti	1Cr18Ni9Ti
16	螺栓 Screw	35	1Cr18Ni9Ti	1Cr18Ni9Ti
17	连接套 Connecting Set	1Cr18Ni9Ti	1Cr18Ni9Ti	1Cr18Ni9Ti
18	手动装置 Hand Gear	塑料 Plastic		
19	电动装置 Electric Actuator	开关型、调节型、多回转型、防爆型 ON/OFF、Regulation 、Multi-Turn、Explosion-Proof		

※注：系列球阀主要零部件及密封圈的材质可根据实际工况条件或用户特殊要求设计选用。
Note: The main spare parts and sealing-ring materials of ball valve series can be designed for options as per real working conditions and users'special requirements.

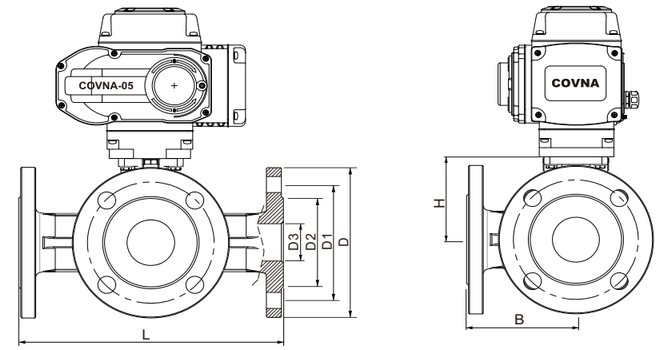

主要外形及连接法兰尺寸 GB-PN16
Main Outline and Connecting Flange Size

MEDLE	DN15	DN20	DN25	DN32	DN40	DN50	DN65	DN80	DN100	DN125	DN150	DN200
G	1/2"	3/4"	1"	1-1/4"	1-1/2"	2"	2-1/2"	3"	4"	5"	6"	8"
D3	15	20	25	30	40	50	65	80	100	125	150	200
D2	45	55	65	78	85	100	120	135	155	185	210	265
D1	65	75	85	100	110	125	145	160	180	210	240	295
D	95	105	115	135	145	160	180	195	215	245	280	335
L	150	164	180	200	220	240	260	280	320	380	440	550
H	53	58.5	70	77.5	88.5	92	107	119	150	200	240	300
B	72	80	90	100	110	120	130	140	160	190	220	260
n-φd	4-ϕ14	4-ϕ14	4-ϕ14	4-ϕ18	4-ϕ18	4-ϕ18	4-ϕ18	8-ϕ18	8-ϕ18	8-ϕ18	8-φ18	12-ϕ23

主要外形及连接法兰尺寸 GB-PN25
Main Outline and Connecting Flange Size

MEDLE	DN15	DN20	DN25	DN32	DN40	DN50	DN65	DN80	DN100	DN125	DN150	DN200
G	1/2"	3/4"	1"	1-1/4"	1-1/2"	2"	2-1/2"	3"	4"	5"	6"	8"
D3	15	20	25	30	40	50	65	80	100	125	150	200
D2	45	55	65	78	85	100	120	135	160	190	220	250
D1	65	75	85	100	110	125	145	160	190	220	250	310
D	95	105	115	140	150	160	180	195	230	270	300	360
L	150	164	180	200	220	240	260	280	320	380	440	550
H	53	58.5	70	77.5	88.5	92	107	119	150	200	240	300
B	72	80	90	100	110	120	130	140	160	190	220	260
n-φd	4-ϕ14	4-ϕ14	4-ϕ14	4-ϕ18	4-ϕ18	4-ϕ18	8-ϕ18	8-ϕ18	8-ϕ 23	8-ϕ25	8-ϕ25	12-ϕ25

*注：系列球阀结构长度及连接法兰尺寸可根据用户要求设计制造。
根据不同的扭矩、介质，适配的执行器型号及尺寸可能有所不同。
以上执行器配置数据均采集自软密封(F, N, P)阀门，硬密封阀门的配置及数据请咨询本公司。

Note: The structural length and connecting flange size of ball valve series can be made to order.
The actuator model vary with different output torque and medium.
Above data are all on basis of soft-sealed valves(F, N, P), contact COVNA for hard-sealed valves data.

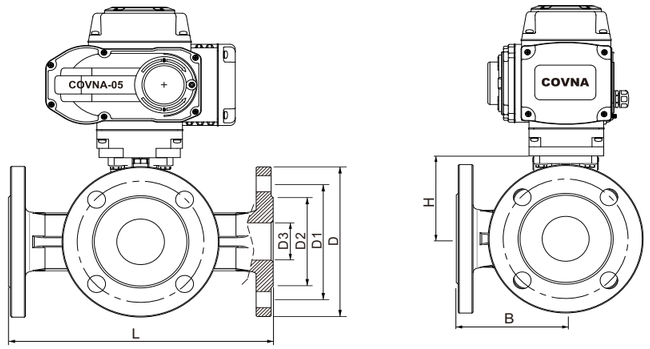

主要外形及连接法兰尺寸JIS-10K
Main Outline and Connecting Flange Size

MEDLE	DN15	DN20	DN25	DN32	DN40	DN50	DN65	DN80	DN100	DN125	DN150	DN200
G	1/2"	3/4"	1"	1-1/4"	1-1/2"	2"	2-1/2"	3"	4"	5"	6"	8"
D3	15	20	25	30	40	50	65	80	100	125	150	200
D2	52	58	70	80	85	100	120	130	155	185	215	265
D1	70	75	90	100	105	120	140	150	175	210	240	290
D	95	100	125	135	140	155	175	185	210	250	280	330
L	150	164	180	200	220	240	260	280	320	380	440	550
H	53	58.5	70	77.5	88.5	92	107	119	150	200	240	300
B	72	80	90	100	110	120	130	140	160	190	220	260
n-φd	4-φ15	4-φ15	4-φ19	4-φ19	4-φ19	4-φ19	4-φ19	8-φ19	8-φ19	8-φ23	8-φ23	12-φ23

主要外形及连接法兰尺寸JIS-20K
Main Outline and Connecting Flange Size

MEDLE	DN15	DN20	DN25	DN32	DN40	DN50	DN65	DN80	DN100	DN125	DN150	DN200
G	1/2"	3/4"	1"	1-1/4"	1-1/2"	2"	2-1/2"	3"	4"	5"	6"	8"
D3	15	20	25	30	40	50	65	80	100	125	150	200
D2	52	58	70	80	85	100	120	135	160	195	230	275
D1	70	75	90	100	105	120	140	160	185	225	260	305
D	95	100	125	135	140	155	175	200	225	270	305	350
L	150	164	180	200	220	240	260	280	320	380	440	550
H	53	58.5	70	77.5	88.5	92	107	119	150	200	240	300
B	72	80	90	100	110	120	130	140	160	190	220	260
n-φd	4-φ15	4-φ15	4-φ19	4-φ19	4-φ19	8-φ19	8-φ19	8-φ23	8-φ23	8-φ25	8-φ25	12-φ25

*注：系列球阀结构长度及连接法兰尺寸可根据用户要求设计制造。
根据不同的扭矩、介质，适配的执行器型号及尺寸可能有所不同。
以上执行器配置数据均采集自软密封(F, N, P)阀门，硬密封阀门的配置及数据请咨询本公司。

Note: The structural length and connecting flange size of ball valve series can be made to order.
The actuator model vary with different output torque and medium.
Above data are all on basis of soft-sealed valves(F, N, P), contact COVNA for hard-sealed valves data.

主要外形及连接法兰尺寸 ANSI-Class150
Main Outline and Connecting Flange Size

MEDLE	DN15	DN20	DN25	DN32	DN40	DN50	DN65	DN80	DN100	DN125	DN150	DN200
G	1/2"	3/4"	1"	1-1/4"	1-1/2"	2"	2-1/2"	3"	4"	5"	6"	8"
D3	15	20	25	30	40	50	65	80	100	125	150	200
D2	34.9	42.9	50.8	63.5	73	92.1	104.8	127	157.2	185.7	215.9	269.9
D1	60.3	69.9	79.4	88.9	98.4	120.7	139.7	152.4	190.5	215.9	241.3	298.5
D	90	100	110	115	125	150	180	190	230	255	280	345
L	150	164	180	200	220	240	260	280	320	380	440	550
H	53	58.5	70	77.5	88.5	92	107	119	150	200	240	300
B	72	80	90	100	110	120	130	140	160	190	220	260
n-φd	4-φ16	4-φ16	4-φ16	4-φ16	4-φ16	4-φ19	4-φ19	4/8-φ19	8-φ19	8-φ22	8-φ22	8-φ22

主要外形及连接法兰尺寸 ANSI-Class300
Main Outline and Connecting Flange Size

MEDLE	DN15	DN20	DN25	DN32	DN40	DN50	DN65	DN80	DN100	DN125	DN150	DN200
G	1/2"	3/4"	1"	1-1/4"	1-1/2"	2"	2-1/2"	3"	4"	5"	6"	8"
D3	15	20	25	30	40	50	65	80	100	125	150	200
D2	34.9	42.9	50.8	63.5	73	92.1	104.8	127	157.2	185.7	215.9	269.9
D1	66.7	82.6	88.9	98.4	114.3	127	149.2	168.3	200	235	269.9	330.2
D	95	115	125	135	155	165	190	210	255	280	320	380
L	150	164	180	200	220	240	260	280	320	380	440	550
H	53	58.5	70	77.5	88.5	92	107	119	150	200	240	300
B	72	80	90	100	110	120	130	140	160	190	220	260
n-φd	4-φ16	4-φ19	4-φ19	4-φ19	4-φ22	8-φ19	8-φ22	8-φ22	8-φ22	8-φ22	12-φ22	12-φ25

主要外形及连接法兰尺寸 ANSI-Class600
Main Outline and Connecting Flange Size

MEDLE	DN15	DN20	DN25	DN32	DN40	DN50	DN65	DN80	DN100	DN125	DN150	DN200
G	1/2"	3/4"	1"	1-1/4"	1-1/2"	2"	2-1/2"	3"	4"	5"	6"	8"
D3	15	20	25	30	40	50	65	80	100	125	150	200
D2	34.9	42.9	50.8	63.5	73	92.1	104.8	127	157.2	185.7	215.9	269.9
D1	66.7	82.6	88.9	98.4	114.3	127	149.2	168.3	215.9	266.7	292.1	349.2
D	95	115	125	135	155	165	190	210	275	330	355	420
L	150	164	180	200	220	240	260	280	320	380	440	550
H	53	58.5	70	77.5	88.5	92	107	119	150	200	240	300
B	72	80	90	100	110	120	130	140	160	190	220	260
n-φd	4-φ16	4-φ19	4-φ19	4-φ19	4-φ22	8-φ19	8-φ22	8-φ22	8-φ25	8-φ29	12-φ29	12-φ32

HK60-Q-T电动三通螺纹球阀

Electric 3-Way Threaded Ball Valve

技术规范 Technical Parameter

设计依据 Design Basis	GB	ANSI
设计标准 Design Standard	GB/12237	ANSI B16.34
连接法兰尺寸 Connecting Flange Size	GB/9113 JB/T79	ANSI B16.5
试验和检验 Test & Inspection	JB/T9092	API 598

※注：系列球阀结构长度及连接法兰尺寸可根据用户要求设计制造。
Note: The structural length and connecting flange size of ball valve series can be designed and manufactured as per users'requirments.

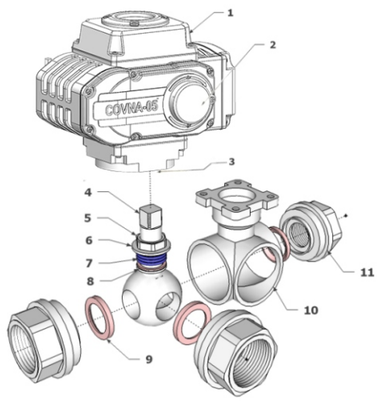

主要零件材质表 Main Parts Materials

序号 No.	零件名称 Name	材质 Material
1	电动装置 Electric Actuator	开关型、调节型、多回转型、防爆型 ON/OFF、Regulation 、Multi-Turn、Explosion-Proof
2	手动装置 Hand Gear	塑料 Plastic
3	连接套 Connecting Set	不锈钢304 Stainless Steel 304
4	阀杆 Stem	不锈钢304、304L、316、316L Stainless Steel 304、304、316、316L
5	螺栓 Screw	不锈钢304、316L Stainless Steel 304、316L
6	压盖 Gland	不锈钢304、316L Stainless Steel 304、316L
7	填料 Packing	PTFE
8	球体 Ball	不锈钢304、304L、316、316L Stainless Steel 304、304L、316、316L
9	阀座 Seat	PTFE、尼龙(Nylon)、对位聚苯(PPL) 硬质合金(H/Y)
10	主阀体 Body	不锈钢CF8、CF8M、Cf3、CF3M Stainless Steel Cf8、CF8M、CF3、CF3M
11	分阀体 Body	不锈钢CF8、CF8M、Cf3、CF3M Stainless Steel Cf8、CF8M、CF3、CF3M

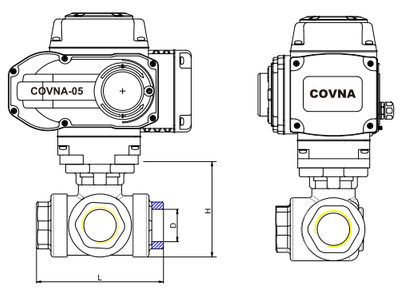

※注：系列球阀主要零部件及密封圈的材质可根据实际工况条件或用户特殊要求设计选用。
Note: The main spare parts and sealing-ring materials of ball valve series can be designed for options as per real working conditions and users'special requirements.

主要外形及连接尺寸 Main Outline and Connecting

MEDLE	DN08	DN10	DN15	DN20	DN25	DN32	DN40	DN50	DN65
G	1/4"	3/8"	1/2"	3/4"	1"	1-1/4"	1-1/2"	2"	2-1/2"
D	10	12	12	15	20	25	32	38	48.5
L	71	71	74	88	92	124	138	154	180
H	56	56	58	60	70	82	95	100	180

HK60-Q-WT电动三通卫生级球阀

Electric 3-Way Sanitary Ball Valve

技术规范 Technical Parameter

设计依据 Design Basis	GB	ANSI
设计标准 Design Standard	GB/12237	ANSI B16.34
试验和检验 Test & Inspection	JB/T9092	API 598

※注：系列球阀结构长度及连接法兰尺寸可根据用户要求设计制造。
Note: The structural length and connecting flange size of ball valve series can be designed and manufactured as per users'requirments.

主要零件材质表 Main Parts Materials

序号 No.	零件名称 Name	材质 Material
1	电动装置 Electric Actuator	开关型、调节型、多回转型、防爆型 ON/OFF、Regulation 、Multi-Turn、Explosion-Proof
2	手动装置 Hand Gear	塑料 Plastic
3	连接套 Connecting Set	不锈钢304 Stainless Steel 304
4	填料 Packing	PTFE
5	O型环 O-Ring	EPDM/PPM
6	阀杆 Stem	不锈钢304、316、316L Stainless Steel 304、316、316L
7	主阀体 Body	不锈钢CF8、CF8M、Cf3、CF3M Stainless Steel Cf8、CF8M、CF3、CF3M
8	球体 Ball	不锈钢304、304L、316、316L Stainless Steel 304、304L、316、316L
9	阀座 Seat	PTFE、尼龙(Nylon)、对位聚苯(PPL) 硬质合金(H/Y)
10	分阀体 Body	不锈钢304、304L、316、316L Stainless Steel 304、304L、316、316L

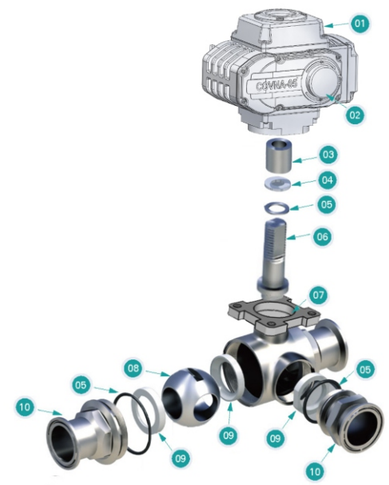

※注：系列球阀主要零部件及密封圈的材质可根据实际工况条件或用户特殊要求设计选用。
Note: The main spare parts and sealing-ring materials of ball valve series can be designed for options as per real working conditions and users'special requirements.

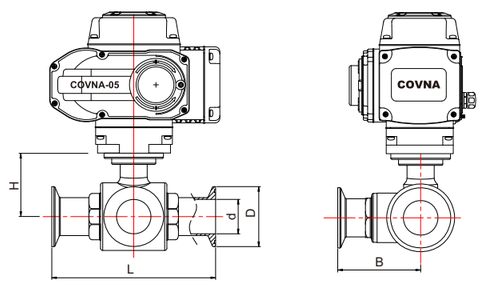

主要外形及连接尺寸 Main Outline and Connecting

Size	3/4" Ø19	1" Ø25	1-1/4" Ø32	1-1/2" Ø38	2" Ø51	2-1/2" Ø63	3" Ø76	3-1/2" Ø89	4" Ø102
d	16.5	22	28.5	35	47.5	58.2	72	84.8	98.3
D	50.5	50.5	50.5	50.5	64	77.5	91	106	119
L	105	126	137	155	184	184	220	240	266
L1	60	61.5	69	77	90	92	122	135	150
H	45	48	52.5	65	74	84	102	112	122

HK60-Q-PT电动三通UPVC球阀

Electric 3-Way UPVC Ball Valve

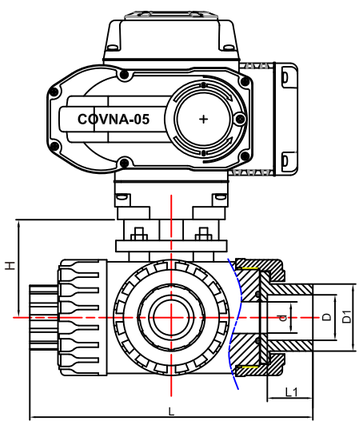

技术规范 Technical Parameter

设计依据 Design Basis	GB	ANSI
设计标准 Design Standard	GB/12237	ANSI B16.34
连接法兰尺寸 Connecting Flange Size	GB/9113 JB/T79	ANSI B16.5
试验和检验 Test & Inspection	JB/T9092	API 598

※注：系列球阀结构长度及连接法兰尺寸可根据用户要求设计制造。
Note: The structural length and connecting flange size of ball valve series can be designed and manufactured as per users'requirments.

主要零件材质表 Main Parts Materials

序号 No.	零件名称 Name	材质 Material
1	电动装置 Electric Actuator	开关型、调节型、多回转型、防爆型 ON/OFF、Regulation 、Multi-Turn、Explosion-Proof
2	手动装置 Hand Gear	塑料 Plastic
3	连接套 Connecting Set	不锈钢304 Stainless Steel 304
4	阀杆 Stem	不锈钢304、304L、316、316L Stainless Steel 304、304、316、316L
5	螺栓 Screw	不锈钢304、316L Stainless Steel 304、316L
6	填料 Packing	PTFE
7	O型环 O-Ring	EPDM/FPM
8	阀座 Seat	PVC/CPVC/PPG/PPHABS
9	球体 Ball	PVC/CPVC/PPG/PPHABS
10	锁母 Union Nut	PVC/CPVC/PPG/PPHABS
11	接管 Endconnector	PVC/CPVC/PPG/PPHABS
12	阀体 Body	PVC/CPVC/PPG/PPHABS

※注：系列球阀主要零部件及密封圈的材质可根据实际工况条件或用户特殊要求设计选用。
Note: The main spare parts and sealing-ring materials of ball valve series can be designed for options as per real working conditions and users'special requirements.

主要外形及连接尺寸
Main Outline and Connecting

MEDLE	DN15	DN20	DN25	DN32	DN40	DN50
G	1/2"	3/4"	1"	1-1/4"	1-1/2"	2"
d	14	22	25	25	38	38
D	20	25	32	40	50	63
D1	30	36	45	55	64	77
L1	22. 8	25	28.5	32	34.8	38
L	137	172	200	208	240	246
H	53	65	68	68	92	92

MEDLE(ANSI)	DN15	DN20	DN25	DN32	DN40	DN50
G	1/2"	3/4"	1"	1-1/4"	1-1/2"	2"
d	16	20	25	30	38	50
D	21.3	26.7	33.4	42.2	48.3	60.3
D1	30	36	45	55	64	77
L1	22. 8	25	28.5	32	34.8	38
L	137	172	200	208	240	246
H	53	65	68	68	92	92

HK60-Q-GT电动三通高压球阀

Electric 3-Way High-Pressure Ball Valve

技术规范 Technical Parameter

设计依据 Design Basis	GB	ANSI
设计标准 Design Standard	GB/12237	ANSI B16.34
试验和检验 Test & Inspection	JB/T9092	API 598

※注：系列球阀结构长度及连接法兰尺寸可根据用户要求设计制造。
Note: The structural length and connecting flange size of ball valve series can be designed and manufactured as per users'requirments.

主要零件材质表 Main Parts Materials

序号 No.	零件名称 Name	材质 Material
1	主阀体 Body	不锈钢304、304L、316、316L Stainless Steel 304、304L、316、316L
2	球体 Ball	不锈钢304、304L、316、316L Stainless Steel 304、304L、316、316L
3	阀座 Seat	PTFE、尼龙(Nylon)、对位聚苯(PPL)
4	O型环 O-Ring	PTFE
5	分阀体 Body	不锈钢CF8、CF8M、Cf3、CF3M Stainless Steel Cf8、CF8M、CF3、CF3M
6	圆柱销 Cylindrical Pin	不锈钢304、316 Stainless Steel 304、316
7	阀杆 Stem	不锈钢304、316、316L Stainless Steel 304、316、316L
8	连接支架 Connecting Yoke	不锈钢304、316 Stainless Steel 304、316
9	连接套 Connecting Set	不锈钢304、316 Stainless Steel 304、316
10	Screw 螺栓	不锈钢304、316 Stainless Steel 304、316
11	电动装置 Electric Actuator	开关型、调节型、多回转型、防爆型 ON/OFF、Regulation 、Multi-Turn、Explosion-Proof
12	手动装置 Hand Gear	塑料 Plastic

※注：系列球阀主要零部件及密封圈的材质可根据实际工况条件或用户特殊要求设计选用。
Note: The main spare parts and sealing-ring materials of ball valve series can be designed for options as per real working conditions and users'special requirements.

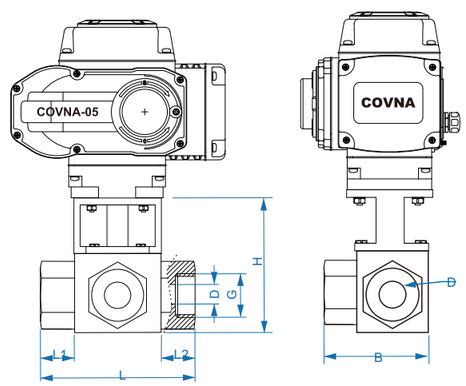

主要外形及连接尺寸 20MPA
Main Outline and Connecting

MEDLE	DN08	DN10	DN15	DN20	DN25	DN32	DN40	DN50
G	1/4"	3/8"	1/2"	3/4"	1"	1-1/4"	1-1/2"	2"
D	8	10	15	20	25	32	40	50
B	64	64	65	80	95	107	123	
H	43	43	43	53	64	70	79	
L	80	80	82	101	120	127	150	
L1	19	19	20	25	29	30	28	
L2	19	19	20	25	29	30	28	

电 动 蝶 阀

Electric butterfly valve

HK60–D 电动铸铁软密封对夹蝶阀
Electric Cast Iron Wafer Butterfly Valve

HK60–D–M 电动凸耳蝶阀
Electric Lugged Butterfly Valve

HK60–D–G 电动硬密封对夹蝶阀
Electric Hard Seal Wafer Butterfly Valve

HK60–D–W 电动卫生级蝶阀
Electric Sanitary Butterfly Valve

HK60–D–F 电动法兰蝶阀
Electric Flanged Butterfly Valve

HK60–D–P 电动UPVC蝶阀
Electric UPVC Butterfly Valve

技术规范 Technical Parameter

设计依据 Design Basis		GB
设计标准 Design Standard		GB/12238
结构长度 Face to Face Dimension	对夹连接 Wafer Connecting	GB/12221
连接法兰尺寸 Connecting Flange Size		GB/12221
试验和检验 Test & Inspection		JB/T9092

※注：系列球阀结构长度及连接法兰尺寸可根据用户要求设计制造。
Note: The structural length and connecting flange size of ball valve series can be designed and manufactured as per users'requirments.

主要零件材质表 Main Parts Materials

序号 No.	零件名称 Component	材质 Material		
		Z	C	P
1	阀座 Seat	橡胶，四氟 Rubber，PTFE		
2	圆锥销 Taper Pin	45钢 45 Steel	45钢 45 Steel	不锈钢 Stainless Steel
3	蝶板 Butterfly Plate	球墨铸铁镀硬铬 Ductile Iron–iron Hard Chrome Plating	碳钢或不锈钢 Simple Steel or Stainless Steel	不锈钢 Stainless Steel
4	阀体 Body	灰铸铁 Grey Cast Iron	碳钢 Carbon Steel	不锈钢 Stainless Steel
5	螺栓 Screw	35钢 35 Steel	碳钢 Carbon Steel	不锈钢 Stainless Steel
6	阀杆 Stem	45钢 45 Steel	不锈钢 Stainless Steel	不锈钢 Stainless Steel
7	键 Key	45钢 45 Steel	45钢 45 Steel	不锈钢 Stainless Steel
8	衬套 Bushing	铜基粉末冶金 Copper Base Powder Metallurgy	铜基粉末冶金 Copper Base Powder Metallurgy	铜基粉末冶金 Copper Base Powder Metallurgy
9	O型圈 O Ring	橡胶 Rubber，氟橡胶 Viton		
10	手动装置 Hand Gear	塑料 Plastic		
11	电动装置 Electric Actuator	开关型、调节型、多回转型、防爆型 ON/OFF、Regulation 、Multi–Turn、Explosion–Proof		

※注：系列蝶阀主要零部件及密封圈的材质可根据实际工况条件或用户特殊要求设计选用。
Note: The Materials for main parts and ball seats of the butterfly valve series can be designed and optioned as per the actual working conditions and users'special requirements.

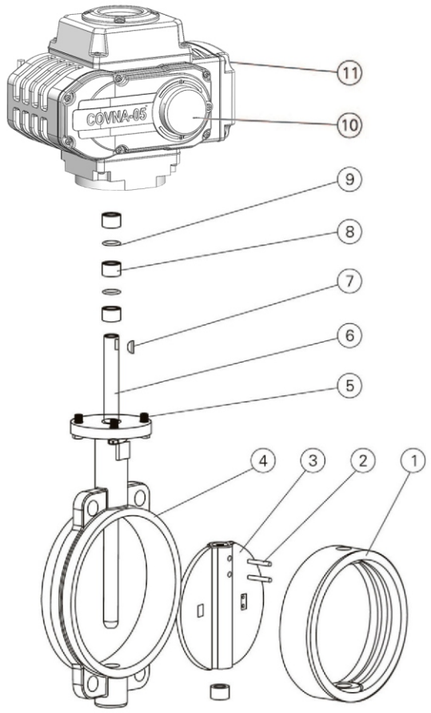

电动铸铁软密封对夹蝶阀
Electric Cast Iron Wafer Butterfly Valve

型号：HK60-D
口径：DN40~1200mm
压力： 1.0MPA、1.6MPA、150LB、10K
结构：对夹式连接、法兰式连接
尺寸标准：国标、美标，日标，德标
阀体材质：铸铁、铸钢
阀板材质：铸铁、不锈钢
阀座材料：橡胶(X)、聚四氟乙烯(F)
旋转角度：0~90˚， 0~360˚
控制方式：开关型、调节型
功能性选择：普通，防水(IP68)，防爆(Ex dII BT4)

Electric Cast Iron Wafer Butterfly Valve

Model: HK6-D
Nominal Diameter: DN40~1200
Pressusre:1.0MPA、1.6MPA、150LB、10K
Connection: Wafer, Flanged Type
Design Standard: GB, ANSI, JIB, DIN
Body Material: Cast Iron、Carbon Steel(WCB)
Disc Material: Cast Iron, Stainless Steel, PTFE
Seat Material: EPDM, PTFE
Actuator: ON-OFF, Regulation Type
Rotation Angle: 0 ~ 90˚,0 ~ 360˚
Functional options: Generic, Waterproof (IP68) , Explosion-Proof (Ex dII BT4)

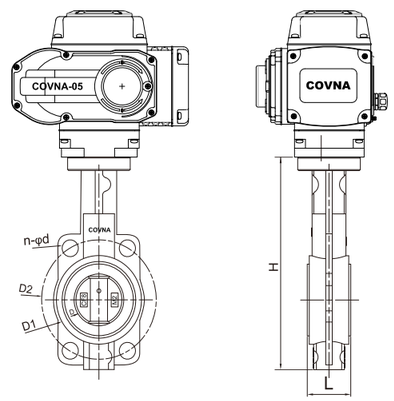

主要外形及连接尺寸 PN(1.0，1.6MPa)
Main Outline and Connecting Flange Size

MEDLE	DN50	DN65	DN80	DN100	DN125	DN150	DN200	DN250	DN300	DN350	DN400	DN500	DN600
Inch	2"	2-1/2"	3"	4"	5"	6"	8"	10"	12"	14"	16"	20"	24"
D	50	65	80	100	125	150	200	250	300	350	400	500	600
D1	96	104	127	153	180	206	270	320	368	428	482	605	
D2	125	145	160	180	210	240	295	355	410	470	525	650	725
L	45	47	48	58	59	59	64	70	78	80	108	120	152
H	212	225	256	280	315	345	405	480	554				
n-φd	4-ϕ18	4-ϕ18	4-ϕ18	4-ϕ18	4-ϕ18	4-ϕ23	4-ϕ23	4-ϕ23	4-ϕ26	4-ϕ26	4-ϕ26	4-ϕ30	4-ϕ36

*注：
系列球阀结构长度及连接法兰尺寸可根据JB/T79标准或要求设计制造。
根据不同的扭矩、介质，适配的执行器型号及尺寸可能有所不同。
以上执行器配置数据均采集自软密封(F, N, P)阀门，硬密封阀门的配置及数据请咨询本公司。

Note:
JB/T79 standard accepted.
The actuator model vary with different output torque and medium.
Above data are all on basis of soft-sealed valves(F, N, P), contact COVNA for hard-sealed valves data.

电动不锈钢对夹蝶阀
Electric Stainless Steel Wafer Butterfly Valve

型号：HK60-D-S
口径：DN40~1200mm
压力：1.0MPA、1.6MPA、150LB、10K
结构：对夹式连接、法兰式连接
尺寸标准：国标、美标，日标，德标
阀体材质：不锈钢
阀板材质：不锈钢
阀座材料：橡胶(X)、聚四氟乙烯(F)
旋转角度：0~90˚, 0~360˚
控制方式：开关型、调节型
功能性选择：普通，防水(IP68)，防爆(Ex dII BT4)

Electric Stainless Steel Wafer Butterfly Valve

Model: HK60-D-S
Nominal Diameter: DN40~1200
Pressusre: 1.0MPA、1.6MPA、150LB、10K
Connection: Wafer, Flanged Type
Design Standard: GB, ANSI, JIB, DIN
Body Material: Stainless Steel(CF8, CF8M)
Disc Material: Stainless SteelM, PTFE
Seat Material: EPDM, PTFE
Actuator: ON-OFF, Regulation Type
Rotation Angle: 0 ~ 90˚,0 ~ 360˚
Functional options: Generic, Waterproof (IP68) , Explosion-Proof (Ex dII BT4)

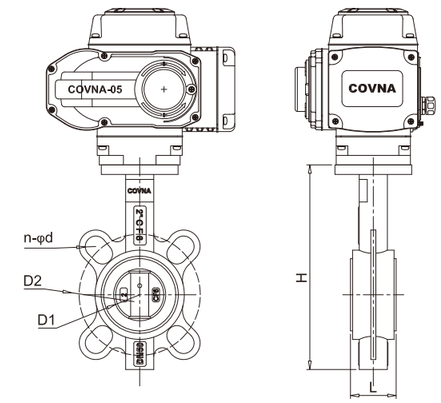

主要外形及连接尺寸PN(1.0，1.6MPa)
Main Outline and Connecting Flange Size

MEDLE	DN50	DN65	DN80	DN100	DN125	DN150	DN200	DN250	DN300	DN350	DN400	DN500
Inch	2"	2-1/2"	3"	4"	5"	6"	8"	10"	12"	14"	16"	20"
D	52.7	64.4	78.8	104.2	123.3	157	202.5	250.5	301.6	333.3	389.6	491.6
D1	89	104	127	153	180	206	270	320	368	428	482	605
D2	125	145	160	180	210	240	295	355	410	470	525	585
L	41	43	45	50	54	54	60	66	75.5	86.5	86.5	131.8
H	207	219	232	262	265	296	353	390	460	508	597	677
n-φd	4-ϕ18	4-ϕ18	4-ϕ18	4-ϕ18	4-ϕ18	4-ϕ23	4-ϕ23	4-ϕ23	4-ϕ26	4-ϕ26	4-ϕ26	4-ϕ30

*注：
系列球阀结构长度及连接法兰尺寸可根据JB/T79标准或要求设计制造。
根据不同的扭矩、介质，适配的执行器型号及尺寸可能有所不同。
以上执行器配置数据均采集自软密封(F, N, P)阀门，硬密封阀门的配置及数据请咨询本公司。

Note:
JB/T79 standard accepted.
The actuator model vary with different output torque and medium.
Above data are all on basis of soft-sealed valves(F, N, P), contact COVNA for hard-sealed valves data.

电动凸耳蝶阀
Electric Lugged Butterfly Valve

型号：HK60-D-M
口径：DN40~1200mm
压力：1.0MPA、1.6MPA、150LB、10K
结构：法兰式连接
尺寸标准：国标、美标，日标，德标
阀体材质：铸铁、碳钢(WCB)、不锈钢(CF8、CF8M)
阀板材质：铸铁、不锈钢
阀座材料：橡胶(X)、聚四氟乙烯(F)
旋转角度：0~90˚, 0~360˚
控制方式：开关型、调节型
功能性选择：普通，防水(IP68)，防爆(Ex dII BT4)

Electric Lugged Butterfly Valve

Model: HK60-D-M
Nominal Diameter: DN40~1200
Pressusre: 1.0MPA、1.6MPA、150LB、10K
Connection: Flanged Type
Design Standard: GB, ANSI, JIB, DIN
Body Material: Cast Iron, Carbon Steel(WCB), Stainless Steel(CF8, CF8M)
Disc Material: Cast Iron, Stainless Steel, PTFE
Seat Material: EPDM, PTFE
Actuator: ON-OFF, Regulation Type
Rotation Angle: 0 ~ 90˚,0 ~ 360˚
Functional options: Generic, Waterproof (IP68) , Explosion-Proof (Ex dII BT4)

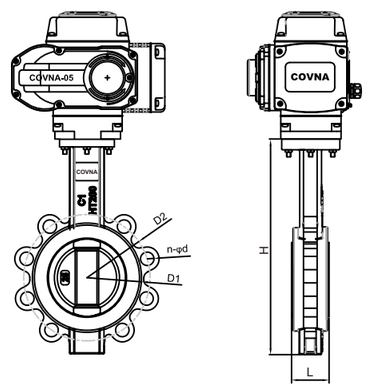

主要外形及连接尺寸 PN(1.0，1.6MPa)
Main Outline and Connecting Flange Size

MEDLE	DN50	DN65	DN80	DN100	DN125	DN150	DN200	DN250	DN300	DN350	DN400	DN500
Inch	2"	2-1/2"	3"	4"	5"	6"	8"	10"	12"	14"	16"	20"
D	52.7	64.4	78.8	104.2	123.3	157	202.5	250.5	301.6	333.3	389.6	491.6
D1	89	104	127	153	180	206	270	320	368	428	482	605
D2	125	145	160	180	210	240	295	355	410	470	525	585
L	41.4	44	45	52	54	54	55	60	65	76	86	130
H	217	234	252	289	318	341	428	490	567			
n-φd	4-M16	4-M16	8-M16	8-M16	8-M16	8-M20	12-M20	12-M24	12-M24			

*注：
系列球阀结构长度及连接法兰尺寸可根据JB/T79标准或要求设计制造。
根据不同的扭矩、介质，适配的执行器型号及尺寸可能有所不同。
以上执行器配置数据均采集自软密封(F, N, P)阀门，硬密封阀门的配置及数据请咨询本公司。

Note:
JB/T79 standard accepted.
The actuator model vary with different output torque and medium.
Above data are all on basis of soft-sealed valves(F, N, P), contact COVNA for hard-sealed valves data.

电动法兰蝶阀
Electric Flanged Butterfly Valve

型号：HK60-D-F
口径：DN40~1200mm
压力：1.0MPA、1.6MPA、150LB、10K
结构：法兰式连接
尺寸标准：国标、美标，日标，德标
阀体材质：铸铁、碳钢(WCB)、不锈钢(CF8、CF8M)
阀板材质：铸铁、不锈钢
阀座材料：橡胶(X)、聚四氟乙烯(F)
旋转角度：0~90˚, 0~360˚
控制方式：开关型、调节型
功能性选择：普通，防水(IP68)，防爆(Ex dII BT4)

Electric Flanged Butterfly Valve

Model: HK60-D-F
Nominal Diameter: DN40~1200
Pressusre: 1.0MPA、1.6MPA、150LB、10K
Connection: Flanged Type
Design Standard: GB, ANSI, JIB, DIN
Body Material: Cast Iron, Carbon Steel(WCB), Stainless Steel(CF8, CF8M)
Disc Material: Cast Iron, Stainless Steel, PTFE
Seat Material: EPDM, PTFE
Actuator: ON-OFF, Regulation Type
Rotation Angle: 0 ~ 90˚,0 ~ 360˚
Functional options:Generic, Waterproof (IP68) , Explosion-Proof (Ex dII BT4)

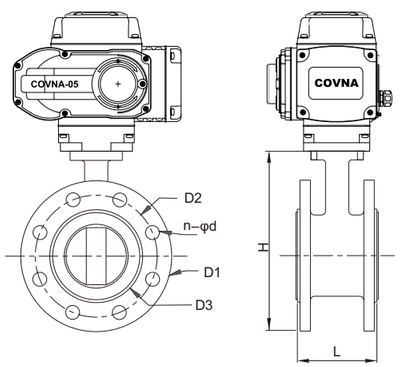

主要外形及连接尺寸 PN(1.0，1.6MPa)
Main Outline and Connecting Flange Size

MEDLE	DN50	DN65	DN80	DN100	DN125	DN150	DN200	DN250	DN300	DN350	DN400	DN500
Inch	2"	2-1/2"	3"	4"	5"	6"	8"	10"	12"	14"	16"	20"
d	52.7	64.4	83	104.2	123.3	157	202.5	250.5	301.6	333.3	389.6	491.6
D	165	185	200	220	250	285	340	395	445	505	565	670
D1	125	145	160	180	210	240	295	355	410	470	525	620
D2	99	118	132	156	184	211	266	319	370	429	480	582
L	108	112	114	127	140	140	150	165	185	195	216	229
H	192	207	224	255	290	325	386	460	510	565	632	759
n-φd	4-ϕ18	4-ϕ18	8-ϕ18	8-ϕ18	8-ϕ18	8-ϕ22	8-ϕ22	12-ϕ22	12-ϕ22	16-ϕ22	16-ϕ26	20-ϕ26

*注：系列球阀结构长度及连接法兰尺寸可根据用户要求设计制造。
根据不同的扭矩、介质，适配的执行器型号及尺寸可能有所不同。
以上执行器配置数据均采集自软密封(F, N, P)阀门，硬密封阀门的配置及数据请咨询本公司。

Note: The structural length and connecting flange size of ball valve series can be made to order.
The actuator model vary with different output torque and medium.
Above data are all on basis of soft-sealed valves(F, N, P), contact COVNA for hard-sealed valves data.

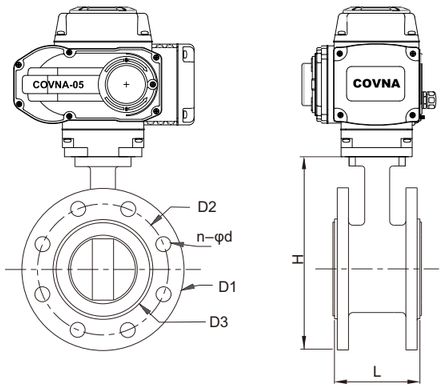

主要外形及连接法兰尺寸 ANSI-150#
Main Outline and Connecting Flange Size

MEDLE	DN50	DN65	DN80	DN100	DN125	DN150	DN200	DN250	DN300	DN350	DN400	DN500
Inch	2"	2-1/2"	3"	4"	5"	6"	8"	10"	12"	14"	16"	20"
d	52.7	64.4	83	104.2	123.3	157	202.5	250.5	301.6	333.3	389.6	491.6
D	152	178	190	229	255	279	343	406	483	533	597	698
D1	120. 7	139. 7	152. 4	190. 5	215. 9	241. 3	298. 5	362	432	476	540	635
D2	92. 1	104. 8	127	157. 2	185. 7	215. 9	269. 9	323. 8	381	412. 8		
L	110	112	114	127	140	140	150	165	185	195	216	229
H	192	207	224	255	290	325	386	460	510	565	632	759
n-φd	4-ϕ19	4-ϕ19	8-ϕ19	8-ϕ23	8-ϕ23	8-ϕ23	8-ϕ23	12-ϕ25	12-ϕ25	16-ϕ29	16-ϕ29	16-ϕ32

主要外形及连接法兰尺寸 JIS-10K
Main Outline and Connecting Flange Size

MEDLE	DN50	DN65	DN80	DN100	DN125	DN150	DN200	DN250	DN300	DN350	DN400	DN500
Inch	2"	2-1/2"	3"	4"	5"	6"	8"	10"	12"	14"	16"	20"
d	52.7	64.4	83	104.2	123.3	157	202.5	250.5	301.6	333.3	389.6	491.6
D	130	165	180	200	235	265	320	385	430	480	540	655
D1	105	130	145	165	200	230	280	345	390	435	495	605
D2	85	97	116	138	167	192	243	302	345	392	448	546
L	43	45	60	60	100	100	100	110	110	120	130	160
H	212	235	245	275	315	340	410	510	538	600	665	780
n-φd	4-ϕ12	4-ϕ12	8-ϕ16	8-ϕ19	8-ϕ19	8-ϕ19	8-ϕ23	12-ϕ23	12-ϕ23	16-ϕ25	16-ϕ25	20-ϕ25

电动衬氟蝶阀
Electric PTFE-Lined Butterfly Valve

型号：HK60-D-C
口径：DN40~1200mm
压力：1.0MPA、1.6MPA、150LB、10K
结构：对夹式连接、法兰式连接
尺寸标准：国标、美标，日标，德标
阀体材质：铸铁、碳钢(WCB)、不锈钢(CF8、CF8M)
阀板材质：铸铁+聚四氟乙烯(F)
阀座材料：聚四氟乙烯(F)
旋转角度：0~90˚, 0~360˚
控制方式：开关型、调节型
功能性选择：普通，防水(IP68)，防爆(Ex dII BT4)

Electric PTFE-Lined Butterfly Valve

Model: HK60-D-C
Nominal Diameter: DN40~1200
Pressusre:1.0MPA、1.6MPA、150LB、10K
Connection: Wafer, Flanged Type
Design Standard: GB, ANSI, JIB, DIN
Body Material: Cast Iron, Carbon Steel(WCB), Stainless Steel(CF8, CF8M)
Disc Material: Cast Iron+PTFE
Seat Material: PTFE
Actuator: ON-OFF, Regulation Type
Rotation Angle: 0 ~ 90˚,0 ~ 360˚
Functional options: Generic, Waterproof (IP68) , Explosion-Proof (Ex dII BT4)

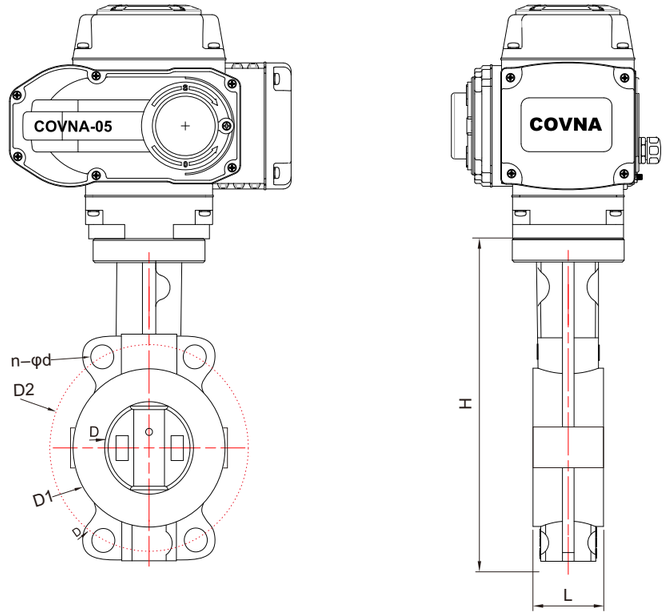

对夹连接主要外形及连接尺寸 PN(1.0，1.6MPa)
Wafer Type Main Outline and Connecting Flange Size

MEDLE	DN50	DN65	DN80	DN100	DN125	DN150	DN200	DN250	DN300	DN350	DN400	DN500
Inch	2"	2-1/2"	3"	4"	5"	6"	8"	10"	12"	14"	16"	20"
D	50	65	80	100	125	150	200	250	300	350	400	500
D1	96	104	127	153	180	206	270	320	368	428	482	605
D2	125	145	160	180	210	240	295	355	410	470	525	585
L	43	46	46	52	56	56	60	68	78	78	102	127
H	212	230	233	270	298	337	407	480	555	610	715	870
n-φd	4-ϕ18	4-ϕ18	4-ϕ18	4-ϕ18	4-ϕ18	4-ϕ23	4-ϕ23	4-ϕ23	4-ϕ23	4-ϕ23	4-ϕ25	4-ϕ25

*注：系列球阀结构长度及连接法兰尺寸可根据用户要求设计制造。
根据不同的扭矩、介质，适配的执行器型号及尺寸可能有所不同。
以上执行器配置数据均采集自软密封(F, N, P)阀门，硬密封阀门的配置及数据请咨询本公司。

Note: The structural length and connecting flange size of ball valve series can be made to order.
The actuator model vary with different output torque and medium.
Above data are all on basis of soft-sealed valves(F, N, P), contact COVNA for hard-sealed valves data.

法兰连接 主要外形及连接尺寸 PN(1.0，1.6MPa)
Flange Type Main Outline and Connecting Flange Size

MEDLE	DN50	DN65	DN80	DN100	DN125	DN150	DN200	DN250	DN300	DN350	DN400	DN500
Inch	2"	2-1/2"	3"	4"	5"	6"	8"	10"	12"	14"	16"	20"
D	50	65	80	100	125	150	200	250	300	350	400	500
D1	96	104	127	153	180	206	270	320	368	428	482	605
D2	125	145	160	180	210	240	295	355	410	470	525	585
L	108	112	114	127	140	140	152	165	178	190	216	229
H	212	230	233	270	298	337	407	480	555	610	715	870
n-φd	4-ϕ18	4-ϕ18	8-ϕ18	8-ϕ18	8-ϕ18	8-ϕ23	8-ϕ23	12-ϕ23	12-ϕ23	16-ϕ23	16-ϕ25	20-ϕ25

*注：系列球阀结构长度及连接法兰尺寸可根据用户要求设计制造。
根据不同的扭矩、介质，适配的执行器型号及尺寸可能有所不同。
以上执行器配置数据均采集自软密封(F, N, P)阀门，硬密封阀门的配置及数据请咨询本公司。

Note: The structural length and connecting flange size of ball valve series can be made to order.
The actuator model vary with different output torque and medium.
Above data are all on basis of soft-sealed valves(F, N, P), contact COVNA for hard-sealed valves data.

技术规范 Technical Parameter

设计依据 Design Basis		GB	ANSI
设计标准 Design Standard		GB/12238	API609
结构长度 Face to Face Dimension	对夹连接 Water Connecting	GB/12221	ANSI B16.10
连接法兰尺寸 Connecting Flange Size		GB/9113 JB/T79	ANSI B16.5(2-24") ANSI B16.47(26-32")
试验和检验 Test & Inspection		JB/T9092	API 598

※注：系列蝶阀结构长度及连接法兰尺寸可根据用户要求设计制造。
Note: The structural length and connecting flange size of butterfly valve series can be designed and manufactured as per users'requirments.

主要零件材质表 Main Parts Materials

序号 No.	零件名称 Name	材质 Material C	P	R
1	内六角螺钉 Inner Hexagon Screw	1Cr18Ni9Ti	1Cr18Ni9Ti	1Cr1812Mo2Ti
2	阀盖 Bonnet	WCB	1Cr18Ni9Ti	ZG1Cr18Ni12Mo2Ti
3	垫 片 Gasket	1Cr18Ni9Ti	1Cr18Ni9Ti	1Cr1812Mo2Ti
4	阀座 Seat	不锈钢+柔性石墨 PTFE Stainless Steel+Graphite PTFE		
5	垫 片 Gasket	1Cr18Ni9Ti	1Cr18Ni9Ti	1Cr1812Mo2Ti
6	蝶板 Butterfly Plate	WCB	ZG1Cr18Ni9Ti	ZG1Cr18Ni12Mo2Ti
7	圆柱销 Straight Pin	45	1Cr18Ni9Ti	1Cr1812Mo2Ti
8	下盖 Bottom Cover	WCB	ZG1Cr18Ni9Ti	ZG1Cr18Ni12Mo2Ti
9	垫片 Gasket	不锈钢+柔性石墨 PTFE Stainless Steel+Graphite PTFE		
10	衬套 Bushing	PTFE复合轴承 Composite bearings		
11	阀体 Body	WCB	ZG1Cr18Ni9Ti	ZG1Cr18Ni12Mo2Ti
12	阀杆 Stem	1Cr13	1Cr18Ni9Ti	ZG1Cr18Ni9Ti
13	支架 Yoke	WCB	WCB	WCB
14	键 Key	45	45	45
15	衬套 Bushing	PTFE复合轴承 Composite Bearings		
16	填 料 Packing	柔性石墨 PTFE Graphite PTFE		
17	压务 Gland	WCB	ZG1Cr18Ni9Ti	ZG1Cr18Ni12Mo2Ti
18	位置指示器 Location Indicator	塑料 Plastic		

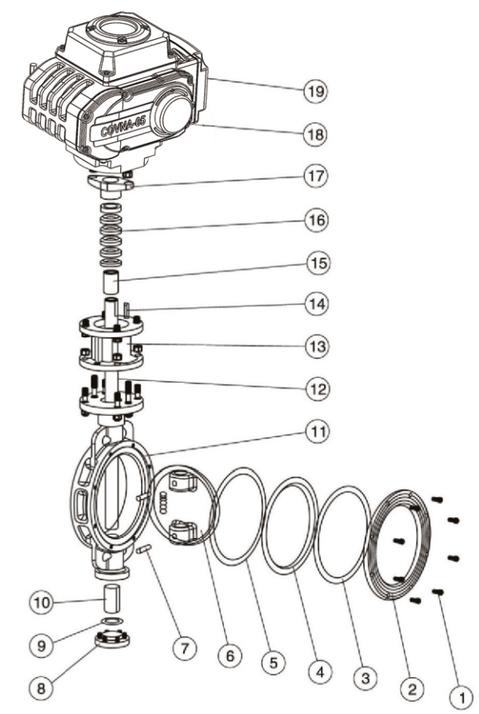

※注：系列蝶阀主要零部件及密封圈的材质可根据实际工况条件或用户特殊要求设计选用。
Note: The Materials for main parts and ball seats of the butterfly valve series can be designed and optioned as per the actual working conditions and users'special requirements.

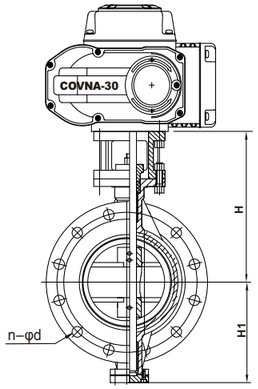

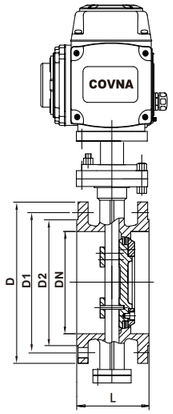

主要外形及连接尺寸
Main Outline and Connecting Size

DN	Inch	L	1.6 MPa				2.5 MPa				150LB				300LB				High	
			D	D1	D2	Z-⌀d	D	D1	D2	Z-⌀d	D	D1	D2	Z-⌀d	D	D1	D2	Z-⌀d	H	H1
50	2"	108	165	125	102	4-⌀18	165	125	102	4-⌀18	150	120.7	92	4-⌀19	165	127	92	8-⌀19	130	96
65	2-1/2"	112	185	145	122	4/8-⌀18	185	145	122	8-⌀18	180	137.7	105	4-⌀19	190	149.2	105	8-⌀22	145	97
80	3"	114	200	160	138	8-⌀18	200	160	138	8-⌀18	190	152.4	127	4-⌀19	210	168.3	127	8-⌀22	167	108
100	4"	127	220	180	158	8-⌀18	235	190	162	8-⌀22	230	190.5	157	8-⌀19	255	200	157	8-⌀22	195	128
125	5"	140	250	210	188	8-⌀18	270	220	188	8-⌀26	255	215.9	186	8-⌀22	280	235	186	8-⌀22	240	145
150	6"	140	285	240	212	8-⌀22	300	250	218	8-⌀26	280	241.3	216	8-⌀22	320	269.9	216	12-⌀22	260	168
200	8"	152	340	295	268	12-⌀22	360	310	278	12-⌀26	345	298.5	270	8-⌀22	380	330.2	270	12-⌀26	290	190
250	10"	165	405	355	320	12-⌀26	425	370	335	12-⌀30	405	362	324	12-⌀26	445	387.4	324	16-⌀29	310	235
300	12"	178	460	410	378	16-⌀26	485	430	305	16-⌀30	485	431.8	381	12-⌀26	520	450.8	381	16-⌀32	380	266
350	14"	190	520	470	438	16-⌀26	555	490	450	16-⌀33	535	476.3	413	12-⌀29	585	514.4	413	20-⌀32	435	300
400	16"	216	580	525	490	16-⌀30	620	550	505	16-⌀36	595	539.8	470	16-⌀29	650	571.5	470	20-⌀35	460	330
450	18"	222	640	585	550	20-⌀30	670	600	555	20-⌀36	635	577.9	533	16-⌀32	710	628.6	533	24-⌀35	485	355
500	20"	229	715	650	610	20-⌀33	730	660	615	20-⌀36	700	635	584	20-⌀32	775	685.8	584	24-⌀35	520	385
600	24"	267	840	770	725	20-⌀36	845	770	720	20-⌀39	815	749.3	692	20-⌀35	915	812.8	692	24-⌀42	610	455
700	28"	292	910	840	795	24-⌀36	960	875	820	24-⌀42	925	863.6	800	28-⌀35	1035	939.8	800	28-⌀45	675	505

*注：
系列球阀结构长度及连接法兰尺寸可根据JB/T79标准或要求设计制造。
根据不同的扭矩、介质，适配的执行器型号及尺寸可能有所不同。
以上执行器配置数据均采集自软密封(F, N, P)阀门，硬密封阀门的配置及数据请咨询本公司。

Note:
JB/T79 standard accepted.
The actuator model vary with different output torque and medium.
Above data are all on basis of soft-sealed valves(F, N, P), contact COVNA for hard-sealed valves data.

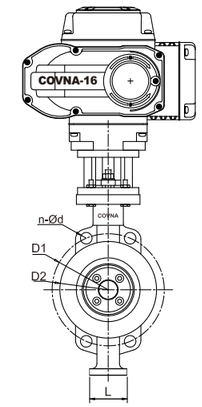

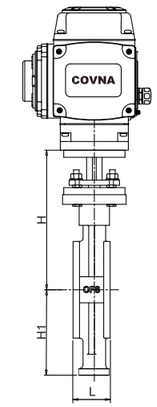

主要外形及连接尺寸 GB-PN16(1.6MPa)
Main Outline and Connecting Size

MEDLE	DN80	DN100	DN125	DN150	DN200	DN250	DN300	DN350	DN400	DN450	DN500
Inch	3"	4"	5"	6"	8"	10"	12"	14"	16"	18"	20"
D	83	104.2	123.3	157	202.5	250.5	301.6	333.3	389.6	449.5	491.6
D1	160	180	210	240	295	355	410	410	525	585	620
D2	132	156	184	211	266	319	370	429	480	548	582
L	49	56	64	70	71	76	83	83	102	114	127
H	260	298	315	325	380	435	475	475	580	620	660
H1	114	128	148	170	188	235	265	265	335	380	410
n-φd	4-ϕ18	8-ϕ18	8-ϕ18	8-ϕ22	12-ϕ23	12-ϕ26	12-ϕ26	12-ϕ26	16-ϕ30	20-ϕ30	20-ϕ33

主要外形及连接尺寸 ANSI-Class 150
Main Outline and Connecting Size

MEDLE	DN80	DN100	DN125	DN150	DN200	DN250	DN300	DN350	DN400	DN450	DN500
Inch	3"	4"	5"	6"	8"	10"	12"	14"	16"	18"	20"
D	83	104.2	123.3	157	202.5	250.5	301.6	333.3	389.6	449.5	491.6
D1	152.4	190.5	215.9	241.3	298.5	362	431.8	476.3	539.8	577.9	635
D2	132	156	184	211	266	319	370	429	480	548	582
L	49	56	64	70	71	76	83	83	102	114	127
H	260	298	315	325	380	435	475	475	580	620	660
H1	114	128	148	170	188	235	265	265	335	380	410
n-φd	4-ϕ18	8-ϕ18	8-ϕ18	8-ϕ22	12-ϕ23	12-ϕ26	12-ϕ26	12-ϕ26	16-ϕ30	20-ϕ30	20-ϕ33

*注：
系列球阀结构长度及连接法兰尺寸可根据JB/T79标准或要求设计制造。
根据不同的扭矩、介质，适配的执行器型号及尺寸可能有所不同。
以上执行器配置数据均采集自软密封(F, N, P)阀门，硬密封阀门的配置及数据请咨询本公司。

Note:
JB/T79 standard accepted.
The actuator model vary with different output torque and medium.
Above data are all on basis of soft-sealed valves(F, N, P), contact COVNA for hard-sealed valves data.

卡箍
Tri-Clamp

螺纹
Male-Threaded

焊接
Butt-Welded

三片式焊接
3-PCS butt welded

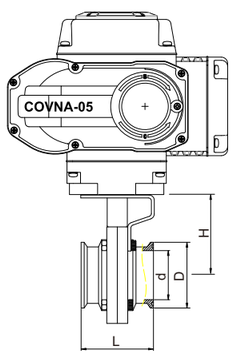

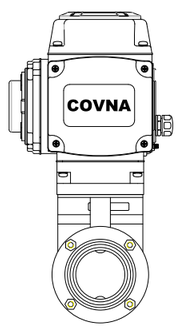

技术规范 Technical Parameter

设计依据 Design Basis	GB
设计标准 Design standard	GB/12238-1989
试验和检验 Test & inspection	JB/T9092

※注：系列球阀结构长度及连接法兰尺寸可根据用户要求设计制造。
Note: The structural length and connecting flange size of ball valve series can be designed and manufactured as per users'requirments.

主要零件材质表 Main Parts Materials

序号 No.	零件名称 Name	材质 Material
1	电动装置 Electric Actuator	开关型、调节型、多回转型、防爆型 ON/OFF、Regulation 、Multi-Turn、Explosion-Proof
2	手动装置 Hand Gear	塑料 Plastic
3	连接套 Connecting Set	不锈钢304 Stainless Steel 304
4	阀杆 Stem	不锈钢304、304L、316、316L Stainless Steel 304、304、316、316L
5	螺栓 Screw	不锈钢304、316L Stainless Steel 304、316L
6	螺母 Nut	不锈钢304、316L Stainless Steel 304、316L
7	填料 Packing	PTFE
8	连接支架 Connecting Yoke	不锈钢304、304L、316、316L Stainless Steel 304、304L、316、316L
9	蝶板 Disc	不锈钢304、304L、316、316L Stainless Steel 304、304L、316、316L
10	阀座 Seat	三元乙丙橡胶、硅胶、定制高温 EPDM 、SIL、High temperature glue
11	左阀体 Left Body	不锈钢CF8、CF8M、Cf3、CF3M Stainless Steel Cf8、CF8M、CF3、CF3M
12	右阀体 Right Body	不锈钢CF8、CF8M、Cf3、CF3M Stainless Steel Cf8、CF8M、CF3、CF3M

※注：系列球阀主要零部件及密封圈的材质可根据实际工况条件或用户特殊要求设计选用。
Note: The main spare parts and sealing-ring materials of ball valve series can be designed for options as per real working conditions and users'special requirements.

主要外形及连接尺寸（卡箍连接）1.6MPA
Main Outline and Connecting with clamp connection

Size	3/4"	1"	1-1/4"	1-1/2"	1-3/4"	2"	2-1/4"	2-1/2"	3"	3-1/2"	4"	4"	4-1/2"	5"	6"
	Ø19	Ø25	Ø32	Ø38	Ø45	Ø51	Ø57	Ø63	Ø76	Ø89	Ø102	Ø108	Ø114	Ø133	Ø159
d	16. 1	22. 4	28. 8	35. 1	42	47. 8	53	59. 5	72. 2	85	97. 6	104	110	128	153.5
D	50.5	50.5	50.5	50.5	64	64	77. 5	77.5	91	106	119	119	130	145	183
L	66	66	66	66	70	72	76	76	76	84	90	90	106	128/100	132/100

技术规范 Technical Parameter

规格 Specifications	DN50-DN200(2"-8")
工作压力 Working pressure	DN50- DN150 10kg/cm²
	DN 200 6kg/cm²
材质 Texture of material	PVC CPVC
	FRPP PPH PVDF
标准 Standard	国际GB 德标DIN 美标ANSI 日标JIS
	台湾 地区CNS

主要零件材质表 Main Parts Materials

序号 No.	零件名称 Name	材质 Material
1	主阀体 Body	UPVC, CPVC, PPR, PVDF
2	阀板 Ball	UPVC, CPVC, PPR,, PVDF
3	阀座 Seat	EPDM/FKM
4	阀杆 Stem	不锈钢304、316、401 Stainless Steel 304、316、401
5	连接套 Connecting Set	不锈钢401、304、316 Stainless Steel 401、304、316
6	Screw 螺栓	不锈钢304、316 Stainless Steel 304、316
7	电动装置 Electric Actuator	开关型、调节型、防爆型 ON/OFF、Regulation 、Multi-Turn、Explosion-Proof
8	手动装置 Hand Gear	塑料 Plastic

※注：系列球阀主要零部件及密封圈的材质可根据实际工况条件或用户特殊要求设计选用。
Note: The main spare parts and sealing-ring materials of ball valve series can be designed for options as per real working conditions and users'special requirements.

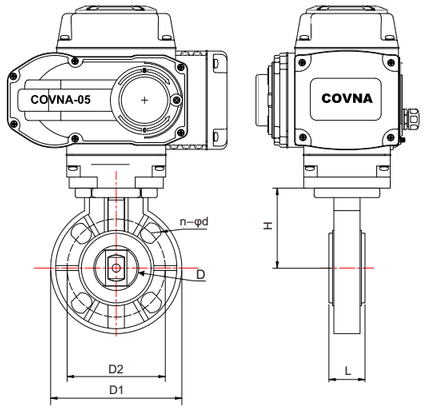

主要外形及连接尺寸 PN10(1.0MPa)
Main Outline and Connecting Flange Size

MEDLE	DN50	DN65	DN80	DN100	DN125	DN150	DN200	DN250	DN300
Inch	2"	2-1/2"	3"	4"	5"	6"	8"	10"	12"
D	52.7	64.4	83	104.2	123.3	157	202.5	250.5	300
D1	160	180	195	226	255	280	340	410	470
D2	120	140	155	178	200	230	285	345	400
L	44	43	47	52	63	68	80	90	105
H	99	108	131	156	168	182	230	261	305
n-φd	4-ϕ18	4-ϕ18	8-ϕ18	8-ϕ18	8-ϕ18	8-ϕ22	8-ϕ22	12-ϕ22	12-ϕ22

*注：系列球阀结构长度及连接法兰尺寸可根据用户要求设计制造。
根据不同的扭矩、介质，适配的执行器型号及尺寸可能有所不同。
以上执行器配置数据均采集自软密封(F, N, P)阀门，硬密封阀门的配置及数据请咨询本公司。

Note: The structural length and connecting flange size of ball valve series can be made to order.
The actuator model vary with different output torque and medium.
Above data are all on basis of soft-sealed valves(F, N, P), contact COVNA for hard-sealed valves data.

防爆电动阀
Explosion-proof Electric Valve

HK60Q-EX-P 防爆电动UPVC球阀
EX-Proof Electric UPVC Ball Valve

HK60Q-EX-3PS 防爆电动三片式内螺纹球阀
EX-Proof Electric 3-PCS Threaded Ball Valve

HK60Q-EX-T 防爆电动三通内螺纹球阀
EX-Proof Electric 3-Way Threaded Ball Valve

HK60Q-EX-F 防爆电动两通法兰球阀
EX-Proof Electric 2-Way Flanged Ball Valve

HK60Q-EX-FT 防爆电动三通法兰球阀
EX-Proof Electric 3-Way Flanged Ball Valve

HK60Q-EX-V 防爆电动V型球阀
EX-Proof Electric V-Port Ball Valve

HK60-EX-D 防爆电动铸铁对夹蝶阀
EX-Proof Electric Cast Iron Wafer Butterfly Valve

HK60-EX-DF 防爆电动法兰蝶阀
EX-Proof Electric Flanged Butterfly Valve

HK60-EX-D 防爆电动硬密封蝶阀
EX-Proof Electric Hard Seal Butterfly Valve

主要技术参数/规格 Main technical parameters, specifications

MODEL		QT-10	QT-15	QT-20	QT-30	QT-40	QT-50	QT-60	QT-80	QT-90	QT-100	QT-200
最大输出扭矩 Max output torque		100	150	200	300	150	400	500	600	800	1000	2000
90°动作时间 90°Action time		18/22	18/22	21/25	21/25	26/31	26/31	26/31	26/31	31/37	31/37	93/112
电机功率 Motor Power		25	40	40	60	90	90	120	120	180	200	200
额定电流(A) Rated current	AC220V	0.55	0.9	0.9	1.0	1.2	1.2	1.9	1.9	2.4	2.6	2.6
	AC380V	≤0.1	≤0.1	≤0.1	0.3	0.55	0.55	0.6	0.6	1.2	1.4	1.4
手轮转数 Handwheel Revolution		10	10	11	11	14	14	14	18	18	18	50

标准规格 Standard specification

外　壳 Housing	防水级别IP67, NEMA 4 and 6 Waterproof level IP67, NEMA 4 and 6	
电　源 Voltage Options	标准：220VAC单相 50/60Hz ±10% 可选：380VAC三相 50/60Hz, ±10% Standard：220VAC single-phase 50/60Hz，±10%　Optional：380V AC three-phase,50/60Hz，±10%	
电　机 Motor	鼠笼式异步电机 Squirrel-cage asynchronous motor	
限位开关 Limit Switch	开/关，各1个 SPDT AC250V/16A On/off, each of the 1 SPDT AC250V/16A	
辅助限位开关 Auxiliary Limit Switch	开/关，各1个 SPDT AC250V/16A On/off, each of the 1 SPDT AC250V/16A	
扭矩开关 Torque Switch	开/关，各1个 SPDT AC250V/16A On/off, each of the 1 SPDT AC250V/16A	QT-010除 外 QT-010 Excluded
行程 Itineraries	90°±10°	0°~270°可 选 0°~270°Optional
失速防护/操作温度 Stall Protection/ operating temperature	内置过热保护，开115°C±5°C / 关97°C±5°C Built-in overheating protection , open 115°C±5°C / Close 97°C±5°C	
指示器 Indicator	连续的位置指示刻度 Continuousposition indicator scale	
手动操作 Manual operation	机械离合机构，配手轮操作 Mechanical clutch mechanism, with handwheel operation	
自锁装置 Self-locking device	蜗轮，蜗杆机构提供自锁 Wonn gear, self-locking provided for the worm mechanism	
机械限位 Mechanical limit	2个外部调整螺栓 Two external adjusting bolts	
干燥器 Desiccator	25W（110/220VAC）	
接线孔 Connection Hole	2 PCS PF 3/4″	
环境温度 Ambient temperature	-20ºC~+70ºC	
润滑 Lubrication	铝基润滑脂（EP型） Aluminium-base grease (EP type)	
材料 Materials	钢，铝合金，铝青铜，聚碳酸脂 Steel/aluminum alloy/aluminum bronze/polycarbonate	
环境湿度 Ambient humidity	最大 90% RH非凝结 Maximum90%RHnon-condensing	
抗震性能 Aseismic performance	X Y Z 10g , 0.2 -34 Hz, 30 分钟 X Y Z 109, 0.2 -34 Hz, Minutes	
外涂层 External coating	干粉，环氧聚酯，具有超强防腐功能 Dry powder/epoxypolyester, with a superior anti-corrosion function	

防爆电动动执行器的结构组成 Structure composition

防爆电动执行器主要由以下几部分组成：

» 壳体部分：包括外壳及底座部分
» 驱动部分：以 高性能全封闭阻笼式电机为动力源
» 传动机构：双蜗轮与离合器部分，
» 比例控制部分：与机械部分分离，提高可靠性
» 力矩开关与限位开关部分
» 开度检测与反馈部分

The electric actuator mainly consists of the following parts:
» Housing part: including housing and base;
» Driving part: powered by a high- performance fully-enclosed squirrel- cage motor;
» Transmission mechanism: double worm gear and clutch;
» Proportional control part: isolated from the mechanical part to improve reliability;
» Torque switch and limit switch part; OOpening detection and feedback part.

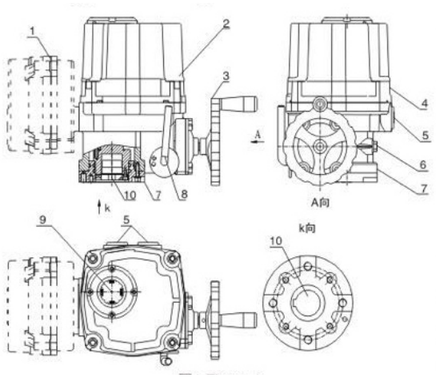

1	控制室 Control room
2	外罩 Enclosure
3	手轮 Handwheel
4	壳体 Housing
5	线缆接入堵头 Cable connection plug
6	机械限位螺钉 Mechanical limit screw
7	连接法兰 Connecting flange
8	离合器手柄 Clutch handle
9	视窗 Window
10	输出轴 Output shaft

防爆电动动执行器外形尺寸图 Outline Dimension Drawing of actuator

QT-10/15

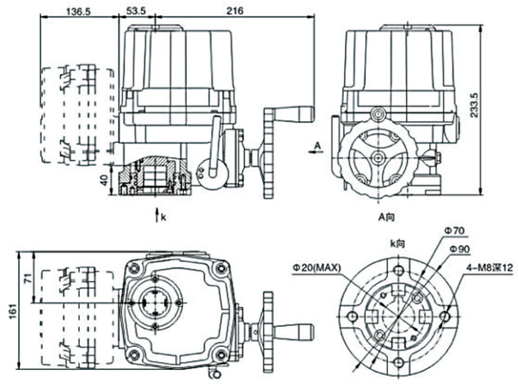

QT-20

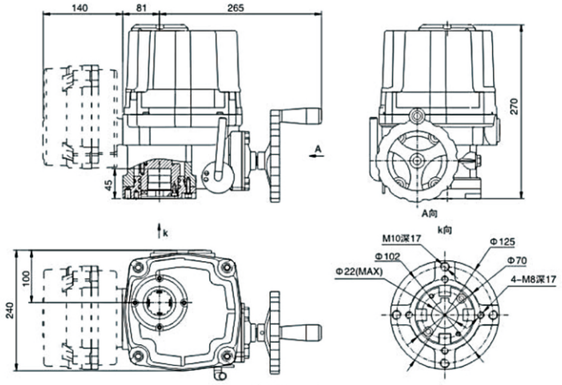

QT-50/60

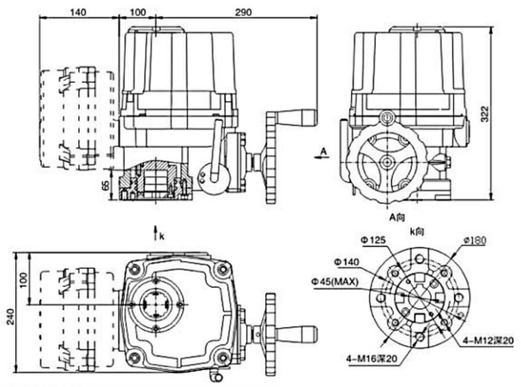

QT-100/200

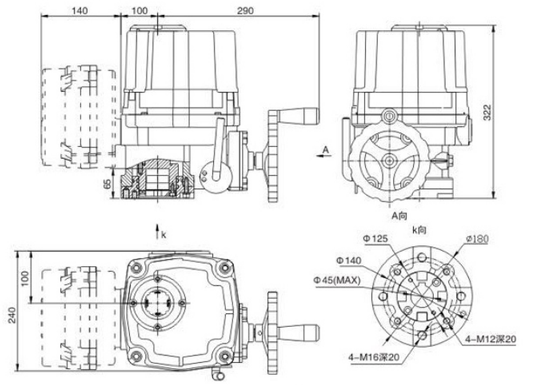

防爆电动执行器接线图 Wiring Diagrams

AC220V 防爆标准开关型

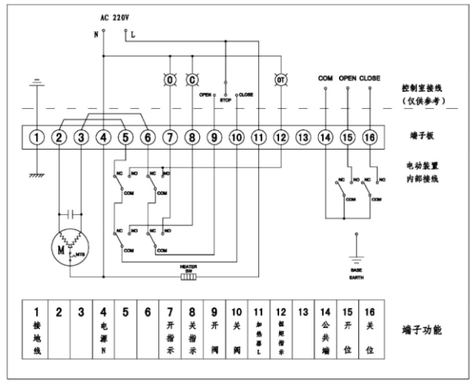

DC24V 防爆标准开关型

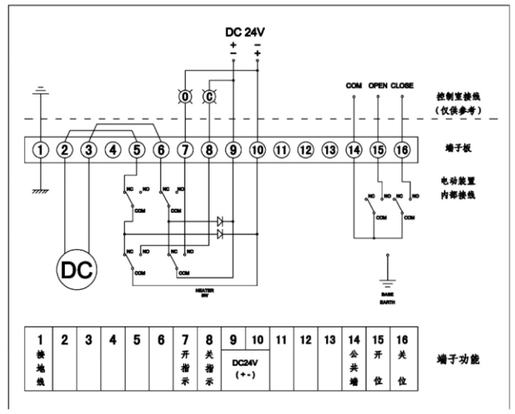

AC380V 防爆标准开关型

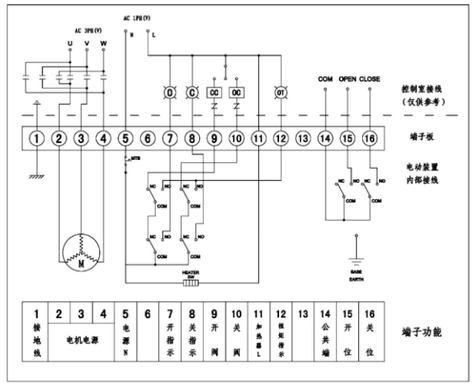

AC220V 防爆整体型

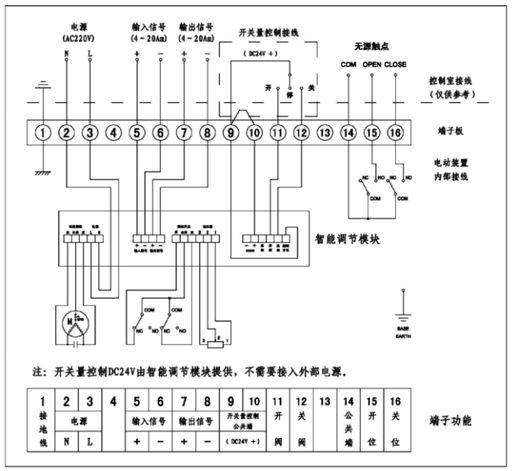

AC380V 防爆整体型

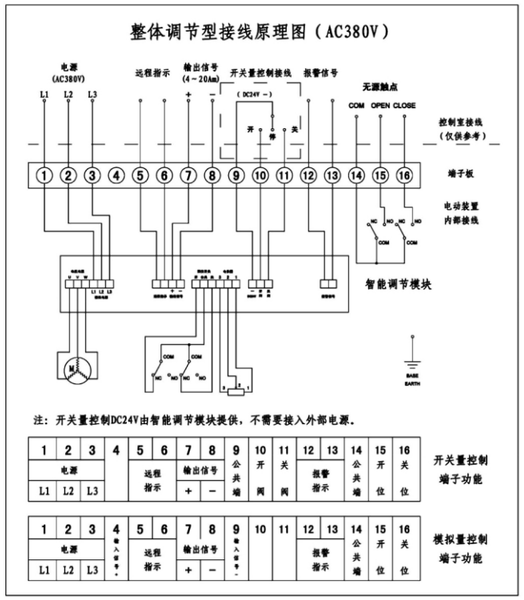

HK60Q-EX-3PS 防爆电动三片式内螺纹球阀

Explosion-Proof Electric 3-PCS Threaded Ball Valve

技术规范 Technical Parameter

设计依据 Design Basis	GB	ANSI
设计标准 Design Standard	GB/12237	ANSI B16.34
试验和检验 Test & Inspection	GB/T9092	API 598

执行器参数 Actuator Technical Parameters

普通开关型 ON-OFF Type	反馈信号：有源触点/无源触点（干触点）信号/ 电阻信号 Feedback: the Active Contact Signal, Passive Contact Signal, Resistance, 4-20mA
普通调节型 Regulation type	输入/输出信号 4-20mA/0-10 V/1-5 V Input & Output Signal: DC 4-20mA, DC 0-10V, DC 1-5V
智能开关型 Intelligent ON/OFF Type	带现场/远程控制开关型以及 MODBUS, PROFIBUS 现场总线 The Local, Remote Control ON/OFF Type and MODBUS, PROFIBUS Field Bus
智能调节型 Intelligent Regulation Type	带现场/远程控制调节型以及 MODBUS, PROFIBUS 现场总线 The Local, Remote Control Regulation Type and MODBUS, PROFIBUS Field Bus
电压 Optional Voltage	AC380V AC220V DC24V,特殊电压可定制 AC380V AC220V DC24V, Special Voltage Can be Customized

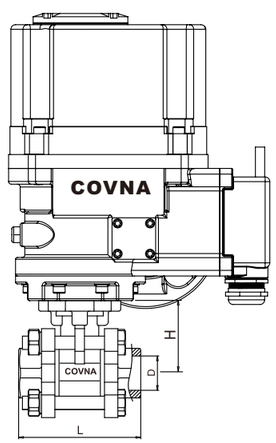

产品参数 Technical Parameters

公称通径 Nominal Size	DN15~DN100
阀体材质 Body Material	SS304, SS316, SS316L
连接类型 Connection Type	螺纹，焊接，卡箍，法兰 Thread, welded,Clamp,Flange
压力等级 Pressure Rating	PN1.6-PN6.3MPa
结构类型 Structure type	浮动球芯直动式； Floating ball core
阀座密封 Seat Material	PTFE: -30℃ ~180℃
阀芯材质 Core Material	SS304, SS316, SS316L
阀杆材质 Stem Material	SS304, SS316, SS316L
适用介质 Applicable Medium	水,液体,气体,油,粉,蒸汽,酸碱腐蚀性介质。 Water, Liquids, Gas, Oil, Powder, Steam, Acid-base Corrosive Medium.

主要外形及连接法兰尺寸 Threaded Type Main Outline and Connecting Flange Size

SIZE	DN08	DN10	DN15	DN20	DN25	DN32	DN40	DN50	DN65	DN80	DN100
G	1/4"	3/8"	1/2"	3/4"	1"	1-1/4"	1-1/2"	2"	2-1/2"	3"	4"
D	11.2	12.5	15	20	25	32	40	50	65	80	100
L	60	60	72	82	90	112	120	145	185	210	268
H	42	42	42	48.5	58.5	63	71	78	100	109	140

HK60Q-EX-T 防爆电动三通内螺纹球阀

Explosion-Proof Electric 3-Way Threaded Ball Valve

技术规范 Technical Parameter

设计依据 Design Basis	GB	ANSI
设计标准 Design Standard	GB/12237	ANSI B16.34
试验和检验 Test & Inspection	GB/T9092	API 598

执行器参数 Actuator Technical Parameters

普通开关型 ON-OFF Type	反馈信号：有源触点/无源触点（干触点）信号/ 电阻信号 Feedback: the Active Contact Signal, Passive Contact Signal, Resistance, 4-20mA
普通调节型 Regulation type	输入/输出信号 4-20mA/0-10 V/1-5 V Input & Output Signal: DC 4-20mA, DC 0-10V, DC 1-5V
智能开关型 Intelligent ON/OFF Type	带现场/远程控制开关型以及 MODBUS, PROFIBUS 现场总线 The Local, Remote Control ON/OFF Type and MODBUS, PROFIBUS Field Bus
智能调节型 Intelligent Regulation Type	带现场/远程控制调节型以及 MODBUS, PROFIBUS 现场总线 The Local, Remote Control Regulation Type and MODBUS, PROFIBUS Field Bus
电压 Optional Voltage	AC380V AC220V DC24V,特殊电压可定制 AC380V AC220V DC24V, Special Voltage Can be Customized

产品参数 Technical Parameters

公称通径 Nominal Size	DN15~DN100
阀体材质 Body Material	SS304, SS316, SS316L
连接类型 Connection Type	螺纹 Thread
压力等级 Pressure Rating	PN1.6-PN6.3MPa
结构类型 Structure type	浮动球芯直动式；三通T型，三通L型 Floating ball core, 3way-T type, 3way-L type
阀座密封 Seat Material	PTFE: -30℃ ~180℃
阀芯材质 Core Material	SS304, SS316, SS316L
阀杆材质 Stem Material	SS304, SS316, SS316L
适用介质 Applicable Medium	水,液体,气体,油,粉,蒸汽,酸碱腐蚀性介质。 Water, Liquids, Gas, Oil, Powder, Steam, Acid-base Corrosive Medium.

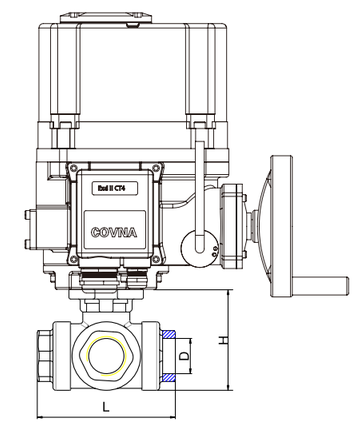

主要外形及连接尺寸 Main Outline and Connecting

MEDLE	DN08	DN10	DN15	DN20	DN25	DN32	DN40	DN50	DN65
G	1/4"	3/8"	1/2"	3/4"	1"	1-1/4"	1-1/2"	2"	2-1/2"
D	10	12	12	15	20	25	32	38	48.5
L	71	71	74	88	92	124	138	154	180
H	56	56	58	60	70	82	95	100	180

技术规范 Technical Parameter

设计依据 Design Standard	GB/12237	ANSI API1608	JIS B2071
结构长度 Structural length	GB/T12221	ASME B16.10	JIS B2002
连接法兰 Connecting Flange	GB/T9113	ASME B16.5	JIS B2212 B2214
试验和检验 Test & Inspection	GB/T12237	API6D API 598	JIS B2003

执行器参数 Actuator Technical Parameters

普通开关型 ON-OFF Type	反馈信号：有源触点/无源触点（干触点）信号/电阻信号 Feedback: the Active Contact Signal, Passive Contact Signal, Resistance, 4-20mA
普通调节型 Regulation type	输入/输出信号 4-20mA/0-10 V/1-5 V Input & Output Signal: DC 4-20mA, DC 0-10V, DC 1-5V
智能开关型 Intelligent ON/OFF Type	带现场/远程控制开关型以及 MODBUS, PROFIBUS 现场总线 The Local, Remote Control ON/OFF Type and MODBUS, PROFIBUS Field Bus
智能调节型 Intelligent Regulation Type	带现场/远程控制调节型以及 MODBUS, PROFIBUS 现场总线 The Local, Remote Control Regulation Type and MODBUS, PROFIBUS Field Bus
电压 Optional Voltage	AC380V AC220V DC24V,特殊电压可定制 AC380V AC220V DC24V, Special Voltage Can be Customized

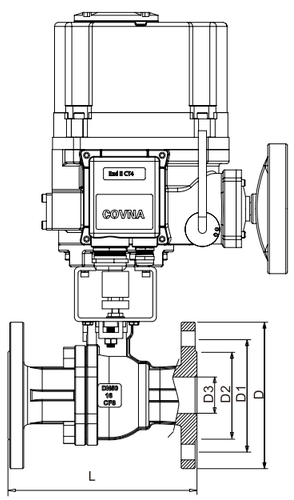

产品参数 Technical Parameters

公称通径 Nominal Size	DN15~DN300
阀体材质 Body Material	铸铁、碳钢(WCB)、不锈钢(CF8、CF8M) Cast Iron, Carbon Steel(WCB), Stainless Steel(CF8, CF8M)
连接类型 Connection Type	法兰 Flange
压力等级 Pressure Rating	PN1.6-PN6.3MPa
结构类型 Structure type	浮动球芯直动式； Floating ball core
阀座密封 Seat Material	PTFE: -30℃ ~180℃
阀芯材质 Core Material	SS304, SS316, SS316L
阀杆材质 Stem Material	SS304, SS316, SS316L
适用介质 Applicable Medium	水,液体,气体,油,粉,蒸汽,酸碱腐蚀性介质。 Water, Liquids, Gas, Oil, Powder, Steam, Acid-base Corrosive Medium.

主要外形及连接法兰尺寸 GB-PN16 Main Outline and Connecting Flange Size

MEDLE	DN15	DN20	DN25	DN32	DN40	DN50	DN65	DN80	DN100	DN125	DN150	DN200
G	1/2"	3/4"	1"	1-1/4"	1-1/2"	2"	2-1/2"	3"	4"	5"	6"	8"
D3	15	20	25	30	40	50	65	80	100	125	150	200
D2	45	55	65	78	85	100	120	135	155	185	210	265
D1	65	75	85	100	110	125	145	160	180	210	240	295
D	95	105	115	135	145	160	180	195	215	245	280	335
L	130	140	150	165	180	200	222	250	280	320	360	400
n-φd	4-ϕ14	4-ϕ14	4-ϕ14	4-ϕ18	4-ϕ18	4-ϕ18	4-ϕ18	8-ϕ18	8-ϕ18	8-ϕ18	8-ϕ18	12-ϕ23

主要外形及连接法兰尺寸 GB-PN25 Main Outline and Connecting Flange Size

MEDLE	DN15	DN20	DN25	DN32	DN40	DN50	DN65	DN80	DN100	DN125	DN150	DN200
G	1/2"	3/4"	1"	1-1/4"	1-1/2"	2"	2-1/2"	3"	4"	5"	6"	8"
D3	15	20	25	30	40	50	65	80	100	125	150	200
D2	45	55	65	78	85	100	120	135	160	190	220	250
D1	65	75	85	100	110	125	145	160	190	220	250	310
D	95	105	115	140	150	160	180	195	230	270	300	360
L	130	130	140	165	180	200	222	250	280	320	360	457
n-φd	4-ϕ14	4-ϕ14	4-ϕ14	4-ϕ18	4-ϕ18	4-ϕ18	8-ϕ18	8-ϕ18	8-ϕ 23	8-ϕ25	8-ϕ25	12-ϕ25

主要外形及连接法兰尺寸 GB-PN40 Main Outline and Connecting Flange Size

MEDLE	DN15	DN20	DN25	DN32	DN40	DN50	DN65	DN80	DN100	DN125	DN150	DN200
G	1/2"	3/4"	1"	1-1/4"	1-1/2"	2"	2-1/2"	3"	4"	5"	6"	8"
D3	15	20	25	30	40	50	65	80	100	125	150	200
D2	45	55	65	78	85	100	120	135	160	188	218	282
D1	65	75	85	100	110	125	145	160	190	220	250	320
D	95	105	115	135	145	160	180	195	230	270	300	375
L	140	152	165	178	190	216	241	283	305	381	403	419
n-φd	4-ϕ14	4-ϕ14	4-ϕ14	4-ϕ18	4-ϕ18	4-ϕ18	8-ϕ18	8-ϕ18	8-ϕ23	8-ϕ25	8-ϕ25	12-ϕ34

主要外形及连接法兰尺寸 GB-PN63 Main Outline and Connecting Flange Size

MEDLE	DN15	DN20	DN25	DN32	DN40	DN50	DN65	DN80	DN100	DN125	DN150	DN200
G	1/2"	3/4"	1"	1-1/4"	1-1/2"	2"	2-1/2"	3"	4"	5"	6"	8"
D3	15	20	25	30	40	50	65	80	100	125	150	200
D2	55	68	78	82	95	105	13	140	168	202	240	300
D1	75	90	100	110	125	135	160	170	200	240	280	345
D	105	125	135	150	165	175	200	210	250	295	340	405
L	140	152	165	178	190	216	241	283	305	381	403	419
n-φd	4-ϕ14	4-ϕ18	4-ϕ18	4-ϕ23	4-ϕ23	4-ϕ23	8-ϕ23	8-ϕ23	8-ϕ25	8-ϕ30	8-ϕ34	12-ϕ34

*注：
系列球阀结构长度及连接法兰尺寸可根据用户要求设计制造。
根据不同的扭矩、介质，适配的执行器型号及尺寸可能有所不同。
以上执行器配置数据均采集自软密封(F, N, P)阀门，硬密封阀门的配置及数据请咨询本公司。

Note:
The structural length and connecting flange size of ball valve series can be made to order.
The actuator model vary with different output torque and medium.
Above data are all on basis of soft-sealed valves(F, N, P), contact COVNA for hard-sealed valves data.

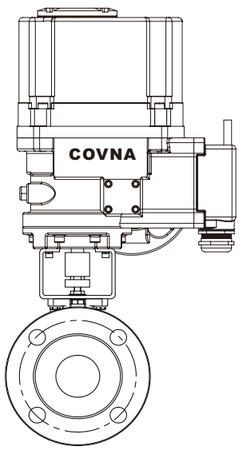

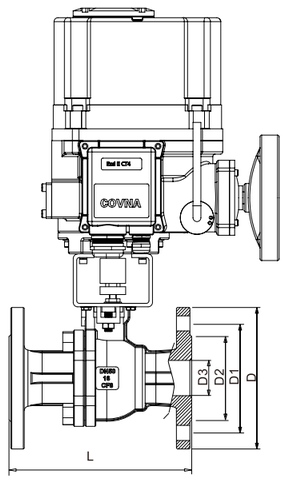

主要外形及连接法兰尺寸 ANSI-150# Main Outline and Connecting Flange Size

MEDLE	DN15	DN20	DN25	DN32	DN40	DN50	DN65	DN80	DN100	DN125	DN150	DN200	DN250
G	1/2"	3/4"	1"	1-1/4"	1-1/2"	2"	2-1/2"	3"	4"	5"	6"	8"	10"
D3	15	20	25	30	40	50	65	80	100	125	150	200	250
D2	34.9	42.9	50.8	63.5	73	92.1	104.8	127	157.2	185.7	215.9	269.9	323.8
D1	60.3	69.9	79.4	88.9	98.4	120.7	139.7	152.4	190.5	215.9	241.3	298.5	362
D	90	100	110	115	125	150	180	190	230	255	280	345	405
L	108	117	127	140	165	178	190	203	229	356	394	457	533
b	11.5	13	14.5	16	17.5	19.5	22.5	24	24	24	25.5	29	30.5
n-φd	4-ϕ16	4-ϕ16	4-ϕ16	4-ϕ16	4-ϕ16	4-ϕ19	4-ϕ19	4-ϕ19	8-ϕ19	8-ϕ22	8-ϕ22	8-ϕ22	12-ϕ25

主要外形及连接法兰尺寸 ANSI-300# Main Outline and Connecting Flange Size

MEDLE	DN15	DN20	DN25	DN32	DN40	DN50	DN65	DN80	DN100	DN125	DN150	DN200	DN250
G	1/2"	3/4"	1"	1-1/4"	1-1/2"	2"	2-1/2"	3"	4"	5"	6"	8"	10"
D3	15	20	25	30	40	50	65	80	100	125	150	200	250
D2	34.9	42.9	50.8	63.5	73	92.1	104.8	127	157.2	185.7	215.9	269.9	323.8
D1	66.7	82.6	88.9	98.4	114.3	127	149.2	168.3	200	235	269.9	330.2	387.4
D	95	115	125	135	155	165	190	210	255	280	320	380	445
L	140	152	165	178	190	216	241	282	305	381	403	502	568
b	14.5	16	17.5	19.5	21	22.5	25.5	29	32	35	37	41.5	48
n-φd	4-ϕ16	4-ϕ19	4-ϕ19	4-ϕ19	4-ϕ22	8-ϕ19	8-ϕ22	8-ϕ22	8-ϕ22	8-ϕ22	12-ϕ22	12-ϕ25	16-ϕ29

技术规范 Technical Parameter

设计依据 Design Standard	GB/12237	ANSI API1608	JIS B2071
结构长度 Structural length	GB/T12221	ASME B16.10	JIS B2002
连接法兰 Connecting Flange	GB/T9113	ASME B16.5	JIS B2212 B2214
试验和检验 Test & Inspection	GB/T12237	API6D API 598	JIS B2003

执行器参数 Actuator Technical Parameters

普通开关型 ON-OFF Type	反馈信号：有源触点/无源触点（干触点）信号/ 电阻信号 Feedback: the Active Contact Signal, Passive Contact Signal, Resistance, 4-20mA
普通调节型 Regulation type	输入/输出信号 4-20mA/0-10 V/1-5 V Input & Output Signal: DC 4-20mA, DC 0-10V, DC 1-5V
智能开关型 Intelligent ON/OFF Type	带现场/远程控制开关型以及 MODBUS, PROFIBUS 现场总线 The Local, Remote Control ON/OFF Type and MODBUS, PROFIBUS Field Bus
智能调节型 Intelligent Regulation Type	带现场/远程控制调节型以及 MODBUS, PROFIBUS 现场总线 The Local, Remote Control Regulation Type and MODBUS, PROFIBUS Field Bus
电压 Optional Voltage	AC380V AC220V DC24V,特殊电压可定制 AC380V AC220V DC24V, Special Voltage Can be Customized

产品参数 Technical Parameters

公称通径 Nominal Size	DN15~DN300
阀体材质 Body Material	铸铁、碳钢(WCB)、不锈钢(CF8、CF8M) Cast Iron, Carbon Steel(WCB), Stainless Steel(CF8, CF8M)
连接类型 Connection Type	法兰 Flange
压力等级 Pressure Rating	PN1.6-PN6.3MPa
结构类型 Structure type	浮动球芯直动式；三通T型，三通L型 Floating ball core, 3way-T type, 3way-L type
阀座密封 Seat Material	PTFE: -30℃ ~180℃
阀芯材质 Core Material	SS304, SS316, SS316L
阀杆材质 Stem Material	SS304, SS316, SS316L
适用介质 Applicable Medium	水,液体,气体,油,粉,蒸汽,酸碱腐蚀性介质。 Water, Liquids, Gas, Oil, Powder, Steam, Acid-base Corrosive Medium.

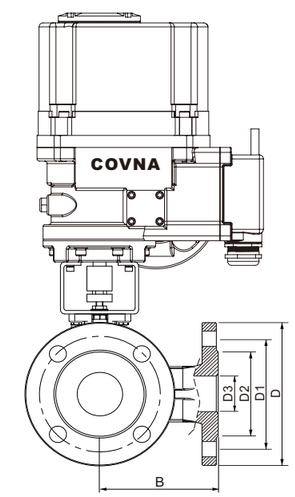

主要外形及连接尺寸 Main Outline and Connecting (1.6Mpa)

MEDLE	DN15	DN20	DN25	DN32	DN40	DN50	DN65	DN80	DN100	DN125	DN150	DN200
G	1/2"	3/4"	1"	1-1/4"	1-1/2"	2"	2-1/2"	3"	4"	5"	6"	8"
D3	15	20	25	30	40	50	65	80	100	125	150	200
D2	45	55	65	78	85	100	120	135	155	185	210	265
D1	65	75	85	100	110	125	145	160	180	210	240	295
D	95	105	115	135	145	160	180	195	215	245	280	335
L	150	164	180	200	220	240	260	280	320	380	440	550
B	72	80	90	100	110	120	130	140	160	190	220	260
n-φd	4-ϕ14	4-ϕ14	4-ϕ14	4-ϕ18	4-ϕ18	4-ϕ18	4-ϕ18	8-ϕ18	8-ϕ18	8-ϕ18	8-ϕ18	12-ϕ23

HK60Q-EX-P 防爆电动UPVC球阀

Explosion-Proof Electric UPVC Ball Valve

技术规范 Technical Parameter

设计依据 Design Basis	GB	ANSI
设计标准 Design Standard	GB/12237	ANSI B16.34
连接法兰尺寸 Connecting Flange Size	GB/9113 JB/T79	ANSI B16.5
试验和检验 Test & Inspection	JB/T9092	API 598

执行器参数 Actuator Technical Parameters

普通开关型 ON-OFF Type	反馈信号：有源触点/无源触点（干触点）信号/ 电阻信号 Feedback: the Active Contact Signal, Passive Contact Signal, Resistance, 4-20mA
普通调节型 Regulation type	输入/输出信号 4-20mA/0-10 V/1-5 V Input & Output Signal: DC 4-20mA, DC 0-10V, DC 1-5V
智能开关型 Intelligent ON/OFF Type	带现场/远程控制开关型以及 MODBUS, PROFIBUS 现场总线 The Local, Remote Control ON/OFF Type and MODBUS, PROFIBUS Field Bus
智能调节型 Intelligent Regulation Type	带现场/远程控制调节型以及 MODBUS, PROFIBUS 现场总线 The Local, Remote Control Regulation Type and MODBUS, PROFIBUS Field Bus
电压 Optional Voltage	AC380V AC220V DC24V,特殊电压可定制 AC380V AC220V DC24V, Special Voltage Can be Customized

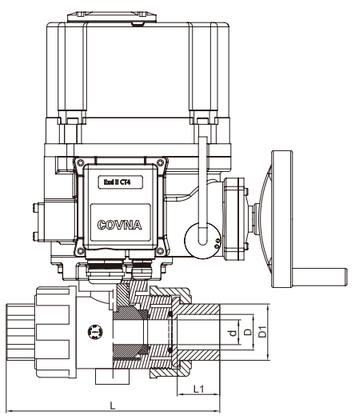

产品参数 Technical Parameters

公称通径 Nominal Size	DN15~DN100
阀体材质 Body Material	Plastic UPVC
连接类型 Connection Type	螺纹双活接 Double union
压力等级 Pressure Rating	PN1.0 MPa
结构类型 Structure type	浮动球芯直动式； Floating ball core, 3way-T type, 3way-L type
阀座密封 Seat Material	EPDM: -30℃ ~80℃
阀芯材质 Core Material	Plastic UPVC
阀杆材质 Stem Material	SS304, SS410
适用介质 Applicable Medium	水,液体,气体,油,粉,蒸汽,轻酸碱腐蚀性介质。 Water, Liquids, Gas, Oil, Powder, Steam, Acid-base Corrosive Medium.

主要外形及连接尺寸 Main Outline and Connecting 1.0 MPa

MEDLE		DN15	DN20	DN25	DN32	DN40	DN50	DN65	DN80	DN100	DN125	DN150	DN200
Inch		1/2"	3/4"	1"	1-1/4"	1-1/2"	2"	2-1/2"	3"	4"	5"	6"	8"
DIN	d	16	20	25	30	38	50	63	78	100	125	150	200
	D	20	25	32	40	50	63	75	90	110	141.3	168.3	225
ANSI	d	16	20	25	30	38	50	63	78	100	125	150	200
	D	21.3	26.7	33.4	42.2	48.3	60.3	73	88.9	114.3	141.3	168.3	219
D1		30	36	45	55	64	77	96	112	141			
L1		22. 8	25	28.5	32	34.8	39	46	48	64.5			
L		121. 8	134. 5	150.2	166.8	179	205	233	257	309			
H		61	74	90	104	121	146	169	220	255			

HK60-EX-Q-V-F 防爆电动V型球阀

Explosion-Proof Electric V-Port Ball Valve

技术规范 Technical Parameter

设计依据 Design Standard	GB/12237	ANSI API1608	JIS B2071
结构长度 Structural length	GB/T12221	ASME B16.10	JIS B2002
连接法兰 Connecting Flange	GB/T9113	ASME B16.5	JIS B2212 B2214
试验和检验 Test & Inspection	GB/T12237	API6D API 598	JIS B2003

执行器参数 Actuator Technical Parameters

普通开关型 ON-OFF Type	反馈信号：有源触点/无源触点（干触点）信号/ 电阻信号 Feedback: the Active Contact Signal, Passive Contact Signal, Resistance, 4-20mA
普通调节型 Regulation type	输入/输出信号 4-20mA/0-10 V/1-5 V Input & Output Signal: DC 4-20mA, DC 0-10V, DC 1-5V
智能开关型 Intelligent ON/OFF Type	带现场/远程控制开关型以及 MODBUS, PROFIBUS 现场总线 The Local, Remote Control ON/OFF Type and MODBUS, PROFIBUS Field Bus
智能调节型 Intelligent Regulation Type	带现场/远程控制调节型以及 MODBUS, PROFIBUS 现场总线 The Local, Remote Control Regulation Type and MODBUS, PROFIBUS Field Bus
电压 Optional Voltage	AC380V AC220V DC24V,特殊电压可定制 AC380V AC220V DC24V, Special Voltage Can be Customized

产品参数 Technical Parameters

公称通径 Nominal Size	DN15~DN300
阀体材质 Body Material	铸铁、碳钢(WCB)、不锈钢(CF8、CF8M) Cast Iron, Carbon Steel(WCB), Stainless Steel(CF8, CF8M)
连接类型 Connection Type	法兰 Flange
压力等级 Pressure Rating	PN1.6-PN6.3MPa
结构类型 Structure type	浮动球芯直动式； Floating ball core, 3way-T type, 3way-L type
阀座密封 Seat Material	PTFE: -30℃ ~180℃
阀芯材质 Core Material	SS304, SS316, SS316L
阀杆材质 Stem Material	SS304, SS316, SS316L
适用介质 Applicable Medium	水,液体,气体,油,粉,蒸汽,酸碱腐蚀性介质。 Water, Liquids, Gas, Oil, Powder, Steam, Acid-base Corrosive Medium.

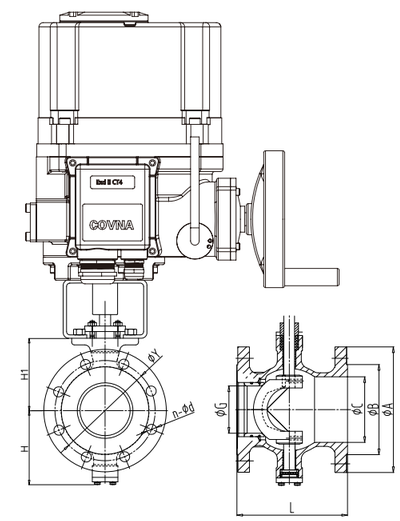

主要外形及连接尺寸 Main Outline and Connecting (1.6Mpa)

MEDLE	DN25	DN32	DN40	DN50	DN65	DN80	DN100	DN125	DN150	DN200
Inch	1"	1-1/4"	1-1/2"	2"	2-1/2"	3"	4"	5"	6"	8"
A	115	140	150	165	185	200	220	250	285	340
B	65	76	84	99	118	132	156	184	211	266
C	38	45	50	62	73	90	115	134	164	206
G	20	25	32	40	55	62	80	100	125	155
Y	85	100	110	125	145	160	180	210	240	295
n-φ d	4-ϕ14	4-ϕ18	4-ϕ18	4ϕ18	8-ϕ18	8-ϕ18	8-ϕ18	8-ϕ18	8-ϕ22	12-ϕ22
L	102	102	114	124	145	165	194	194	229	243
H	81	86	90	93	108	123	138	128	170	200
H1	178	183	185	195	210	223	235	250	270	320

HK60-EX-D-S 防爆电动不锈钢对夹蝶阀

Explosion-Proof Electric Stainless Steel Wafer Butterfly Valve

技术规范 Technical Parameter

设计依据 Design Basis		GB
设计标准 Design Standard		GB/12238
结构长度 Face to Face Dimension	对夹连接 Wafer Connecting	GB/12221
连接法兰尺寸 Connecting Flange Size		GB/12221
试验和检验 Test & Inspection		JB/T9092

执行器参数 Actuator Technical Parameters

普通开关型 ON-OFF Type	反馈信号：有源触点/无源触点（干触点）信号/ 电阻信号 Feedback: the Active Contact Signal, Passive Contact Signal, Resistance, 4-20mA
普通调节型 Regulation type	输入/输出信号 4-20mA/0-10 V/1-5 V Input & Output Signal: DC 4-20mA, DC 0-10V, DC 1-5V
智能开关型 Intelligent ON/OFF Switch	带现场/远程控制开关型以及 MODBUS, PROFIBUS 现场总线 The Local, Remote Control ON/OFF Type and MODBUS, PROFIBUS Field Bus
智能调节型 Intelligent Regulation Type	带现场/远程控制调节型以及 MODBUS, PROFIBUS 现场总线 The Local, Remote Control Regulation Type and MODBUS, PROFIBUS Field Bus
电压 Optional Voltage	AC380V AC220V DC24V,特殊电压可定制 AC380V AC220V DC24V, Special Voltage Can be Customized

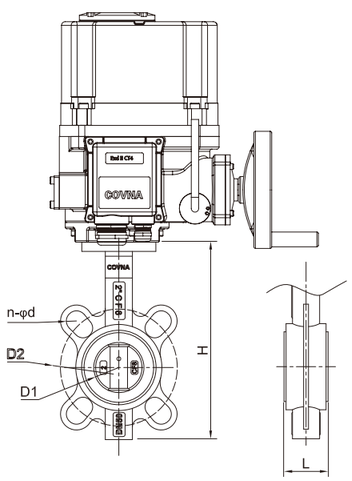

产品参数 Technical Parameters

公称通径 Nominal Size	DN50~DN1000
阀体材质 Body Material	不锈钢(CF8、CF8M) Stainless Steel(CF8, CF8M)
连接类型 Connection Type	对夹,法兰 Wafer, Flanged Type
压力等级 Pressure Rating	PN1.0-PN1.6 MPa
结构类型 Structure type	中线结构 Median line
阀座密封 Seat Material	PDEM: -10℃ ~120℃ PTFE: -30℃ ~180℃
阀板材质 Disc Material	不锈钢(CF8、CF8M) Stainless Steel(CF8, CF8M)
阀杆材质 Stem Material	Stainless Steel (CF8, CF8M)
适用介质 Applicable Medium	水,液体,气体,油,粉,蒸汽,酸碱腐蚀性介质。 Water, Liquids, Gas, Oil, Powder, Steam, Acid-base Corrosive Medium.

主要外形及连接尺寸 Main Outline and Connecting (1.6Mpa)

MEDLE	DN50	DN65	DN80	DN100	DN125	DN150	DN200	DN250	DN300	DN350	DN400	DN500
Inch	2"	2-1/2"	3"	4"	5"	6"	8"	10"	12"	14"	16"	20"
D	52.7	64.4	78.8	104.2	123.3	157	202.5	250.5	301.6	333.3	389.6	491.6
D1	89	104	127	153	180	206	270	320	368	428	482	605
D2	125	145	160	180	210	240	295	355	410	470	525	585
L	41	43	45	50	54	54	60	66	75.5	86.5	86.5	131.8
H	207	219	232	262	265	296	353	390	460	508	597	677
n-φd	4-ϕ18	4-ϕ18	4-ϕ18	4-ϕ18	4-ϕ18	4-ϕ23	4-ϕ23	4-ϕ23	4-ϕ26	4-ϕ26	4-ϕ26	4-ϕ30

HK60-EX-D 防爆电动铸铁对夹蝶阀

Explosion-proof electric Cast Iror butterfly valve

技术规范 Technical Parameter

设计依据 Design Basis		GB
设计标准 Design Standard		GB/12238
结构长度 Face to Face Dimension	对夹连接 Wafer Connecting	GB/12221
连接法兰尺寸 Connecting Flange Size		GB/12221
试验和检验 Test & Inspection		JB/T9092

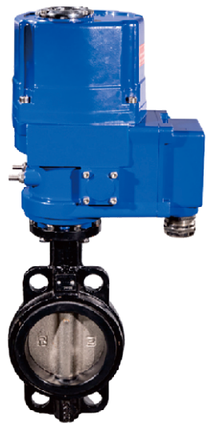

执行器参数 Actuator Technical Parameters

普通开关型 ON-OFF Type	反馈信号：有源触点/无源触点（干触点）信号/ 电阻信号 Feedback: the Active Contact Signal, Passive Contact Signal, Resistance, 4-20mA
普通调节型 Regulation type	输入/输出信号 4-20mA/0-10 V/1-5 V Input & Output Signal: DC 4-20mA, DC 0-10V, DC 1-5V
智能开关型 Intelligent ON/OFF Switch	带现场/远程控制开关型以及 MODBUS, PROFIBUS 现场总线 The Local, Remote Control ON/OFF Type and MODBUS, PROFIBUS Field Bus
智能调节型 Intelligent Regulation Type	带现场/远程控制调节型以及 MODBUS, PROFIBUS 现场总线 The Local, Remote Control Regulation Type and MODBUS, PROFIBUS Field Bus
电压 Optional Voltage	AC380V AC220V DC24V,特殊电压可定制 AC380V AC220V DC24V, Special Voltage Can be Customized

产品参数 Technical Parameters

公称通径 Nominal Size	DN50~DN1000
阀体材质 Body Material	铸铁、碳钢(WCB)、不锈钢(CF8、CF8M) Cast Iron, Carbon Steel(WCB), Stainless Steel(CF8, CF8M)
连接类型 Connection Type	对夹,法兰 Wafer, Flanged Type
压力等级 Pressure Rating	PN1.0-PN1.6 MPa
结构类型 Structure type	中线结构 Median line
阀座密封 Seat Material	PDEM: -10℃ ~120℃ PTFE: -30℃ ~180℃
阀板材质 Disc Material	铸铁、不锈钢(CF8、CF8M) Cast Iron, Stainless Steel(CF8, CF8M)
阀杆材质 Stem Material	Stainless Steel (CF8, CF8M)
适用介质 Applicable Medium	水,液体,气体,油,粉,蒸汽,酸碱腐蚀性介质。 Water, Liquids, Gas, Oil, Powder, Steam, Acid-base Corrosive Medium.

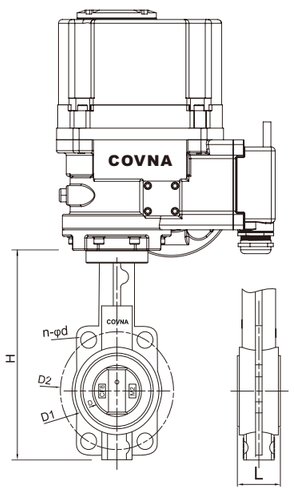

主要外形及连接尺寸 Main Outline and Connecting(1.6Mpa)

MEDLE	DN50	DN65	DN80	DN100	DN125	DN150	DN200	DN250	DN300	DN350	DN400	DN500	DN600
Inch	2"	2-1/2"	3"	4"	5"	6"	8"	10"	12"	14"	16"	20"	24"
D	50	65	80	100	125	150	200	250	300	350	400	500	600
D1	96	104	127	153	180	206	270	320	368	428	482	605	
D2	125	145	160	180	210	240	295	355	410	470	525	650	725
L	45	47	48	58	59	59	64	70	78	80	108	120	152
H	212	225	256	280	315	345	405	480	554				
n-φd	4-ϕ18	4-ϕ18	4-ϕ18	4-ϕ18	4-ϕ18	4-ϕ23	4-ϕ23	4-ϕ23	4-ϕ26	4-ϕ26	4-ϕ26	4-ϕ30	4-ϕ36

HK60-EX-DF 防爆电动法兰蝶阀

Explosion-Proof Electric Flanged Butterfly Valve

技术规范 Technical Parameter

设计依据 Design Standard	GB/12237	ANSI API1608	JIS B2071
结构长度 Structural length	GB/T12221	ASME B16.10	JIS B2002
连接法兰 Connecting Flange	GB/T9113	ASME B16.5	JIS B2212 B2214
试验和检验 Test & Inspection	GB/T12237	API6D API 598	JIS B2003

执行器参数 Actuator Technical Parameters

普通开关型 ON-OFF Type	反馈信号：有源触点/无源触点（干触点）信号/ 电阻信号 Feedback: the Active Contact Signal, Passive Contact Signal, Resistance, 4-20mA
普通调节型 Regulation type	输入/输出信号 4-20mA/0-10 V/1-5 V Input & Output Signal: DC 4-20mA, DC 0-10V, DC 1-5V
智能开关型 Intelligent ON/OFF Switch	带现场/远程控制开关型以及 MODBUS, PROFIBUS 现场总线 The Local, Remote Control ON/OFF Type and MODBUS, PROFIBUS Field Bus
智能调节型 Intelligent Regulation Type	带现场/远程控制调节型以及 MODBUS, PROFIBUS 现场总线 The Local, Remote Control Regulation Type and MODBUS, PROFIBUS Field Bus
电压 Optional Voltage	AC380V AC220V DC24V,特殊电压可定制 AC380V AC220V DC24V, Special Voltage Can be Customized

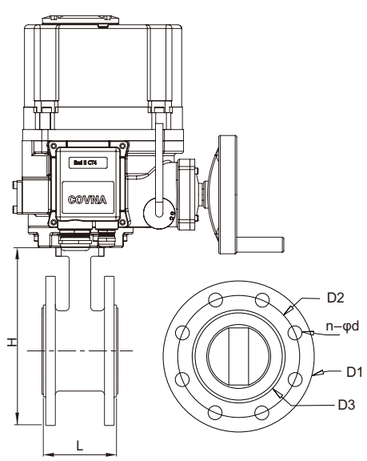

产品参数 Technical Parameters

公称通径 Nominal Size	DN50~DN1000
阀体材质 Body Material	铸铁、碳钢(WCB)、不锈钢(CF8、CF8M) Cast Iron, Carbon Steel(WCB), Stainless Steel(CF8, CF8M)
连接类型 Connection Type	法兰 Flanged Type
压力等级 Pressure Rating	PN1.0-PN1.6MPa
结构类型 Structure type	中线结构 Median line
阀座密封 Seat Material	PDEM: -10℃ ~120℃ PTFE: -30℃ ~180℃
阀板材质 Disc Material	铸铁、不锈钢(CF8、CF8M) Cast Iron, Stainless Steel(CF8, CF8M)
阀杆材质 Stem Material	Stainless Steel (CF8, CF8M)
适用介质 Applicable Medium	水,液体,气体,油,粉,蒸汽,酸碱腐蚀性介质。 Water, Liquids, Gas, Oil, Powder, Steam, Acid-base Corrosive Medium.

主要外形及连接尺寸 Main Outline and Connecting(1.6Mpa)

MEDLE	DN50	DN65	DN80	DN100	DN125	DN150	DN200	DN250	DN300	DN350	DN400	DN500
Inch	2"	2-1/2"	3"	4"	5"	6"	8"	10"	12"	14"	16"	20"
D	52.7	64.4	83	104.2	123.3	157	202.5	250.5	301.6	333.3	389.6	491.6
D1	165	185	200	220	250	285	340	395	445	505	565	670
D2	125	145	160	180	210	240	295	355	410	470	525	620
D3	99	118	132	156	184	211	266	319	370	429	480	582
L	108	112	114	127	140	140	150	165	185	195	216	229
H	192	207	224	255	290	325	386	460	510	565	632	759
n-φd	4-ϕ18	4-ϕ18	8-ϕ18	8-ϕ18	8-ϕ18	8-ϕ22	8-ϕ22	12-ϕ22	12-ϕ22	16-ϕ22	16-ϕ26	20-ϕ26

HK60-EX-D 防爆电动硬密封蝶阀

Explosion-Proof Electric Hard Seal Butterfly Valve

技术规范 Technical Parameter

设计依据 Design Standard	GB/12237	ANSI API1608	JIS B2071
结构长度 Structural length	GB/T12221	ASME B16.10	JIS B2002
连接法兰 Connecting Flange	GB/T9113	ASME B16.5	JIS B2212 B2214
试验和检验 Test & Inspection	GB/T12237	API6D API 598	JIS B2003

执行器参数 Actuator Technical Parameters

普通开关型 ON-OFF Type	反馈信号：有源触点/无源触点（干触点）信号/ 电阻信号 Feedback: the Active Contact Signal, Passive Contact Signal, Resistance, 4-20mA
普通调节型 Regulation type	输入/输出信号 4-20mA/0-10 V/1-5 V Input & Output Signal: DC 4-20mA, DC 0-10V, DC 1-5V
智能开关型 Intelligent ON/OFF Switch	带现场/远程控制开关型以及 MODBUS, PROFIBUS 现场总线 The Local, Remote Control ON/OFF Type and MODBUS, PROFIBUS Field Bus
智能调节型 Intelligent Regulation Type	带现场/远程控制调节型以及 MODBUS, PROFIBUS 现场总线 The Local, Remote Control Regulation Type and MODBUS, PROFIBUS Field Bus
电压 Optional Voltage	AC380V AC220V DC24V,特殊电压可定制 AC380V AC220V DC24V, Special Voltage Can be Customized

产品参数 Technical Parameters

公称通径 Nominal Size	DN50~DN1000
阀体材质 Body Material	铸铁、碳钢(WCB)、不锈钢(CF8、CF8M) Cast Iron, Carbon Steel(WCB), Stainless Steel(CF8, CF8M)
连接类型 Connection Type	法兰 Flanged Type
压力等级 Pressure Rating	PN1.0-PN6.3MPa
结构类型 Structure type	三偏心结构 Triple eccentric construction
阀座密封 Seat Material	Stainless Steel / PTFE
阀板材质 Disc Material	铸铁、不锈钢(CF8、CF8M) Cast Iron, Stainless Steel(CF8, CF8M)
阀杆材质 Stem Material	Stainless Steel (CF8, CF8M)
适用介质 Applicable Medium	水,液体,气体,油,粉,蒸汽,酸碱腐蚀性介质。 Water, Liquids, Gas, Oil, Powder, Steam, Acid-base Corrosive Medium.

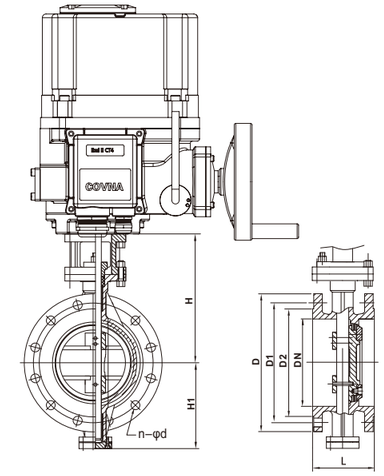

主要外形及连接尺寸 Main Outline and Connecting（1.6MPa）

MEDLE	DN50	DN65	DN80	DN100	DN125	DN150	DN200	DN250	DN300	DN350	DN400	DN500
Inch	2"	2-1/2"	3"	4"	5"	6"	8"	10"	12"	14"	16"	20"
D	165	185	200	220	250	285	340	405	460	520	580	715
D1	125	145	160	180	210	240	295	355	410	470	525	650
D2	102	122	138	158	188	212	268	320	378	438	490	610
L	108	112	114	127	140	140	152	165	178	190	216	229
H1	130	145	167	195	240	260	290	310	380	435	460	520
H2	96	97	108	128	145	168	190	235	266	300	330	355
n-φd	4-ϕ18	4/8-ϕ18	8-ϕ18	8-ϕ18	8-ϕ18	8-ϕ22	12-ϕ22	12-ϕ26	16-ϕ26	16-ϕ26	16-ϕ30	20-ϕ33

小型防爆电动阀

Mini Explosion proof electric valve

电动硬密封对式夹蝶阀

Electric Hard seal wafer butterfly valve

电动法兰球阀

Electric flange ball valve

电动PVC法兰球阀

Electric PVC ball valve

电动硬密封蝶阀

Electric hard seal butterfly valve

电动三通法兰球阀

Electric three-way flange ball valve

电动法兰蝶阀

Electric flange butterfly valve

一、产品概述

BT6-EX系列防爆电动执行器是引进国外最新技术研制的新一代产品，其设计独特、款式新有高智能、高防护性能、体积小、集成度高使用寿命长、性能稳定等特点。可现场操作，也颖;具可远距离控制，适应于控制0° -270° 旋转的阀门及其它同类产品。如蝶阀、球阀风阀、挡板阀、旋塞阀、百叶阀等其它适合0° ~270° 旋转的设备。可满足工业自动化控制管理的各种要求。它以380V/220V/110V交流电源为驱动电源，以4-20mA电流信号或者0-10VDC电压信号为控制信号，可使阀门运动到所需位置实现其自动控制，最大输出扭矩达3000N.M。广泛应用于石油、化工、冶金、水处理、船舶、造纸、电厂、印染、食品加工、制药及楼宇自动化系统等众多行业。

BT6-EX series explosion-proof electric actuators are a new generation of products developed with the latest technology from abroad with unique design and new style It has the characteristics of high intelligence, high protection performance, small volume, high integration, long service life and stable performance. But field operation, too glume n. With remote control, suitable for control of 0° ～270° rotary valves and other similar products. Such as butterfly valve, ball valve, air valve Baffle valve, stopcock valve,louver valve and other equipment suitable for 0~ 270° rotation. It can meet the requirements of industrial automation control management.It is driven by a 380V/220V/110V AC power supply and is controlled by a 4-20Ma current signal or a 0- 10VDC voltage signal The valve can be moved to the desired position to achieve its automatic control, maximum output torque up to 3000N.M. Widely used in petroleum and chemical industry Industrial, Gold, Water Treatment, Shipping, Paper, Power Plant, Printing and Dyeing, Food Processing Pharmaceutical and Building Automation Systems and many other industries.

二、产品特点

01、功能强劲：智能调节型、比例型、开关型、各类信号输出型应有尽有;
02、体小量轻：体积和重量仅相当于传统产品的35%左右;
03、美观大方：铝合金压铸外壳、精美流畅、且可减少电磁干扰;
04、性能可靠：轴承和电气元件等关键零部件采用进口名牌产品;
05、高标防护： IP68高标准防护等级
06、精密耐磨：蜗轮输出轴一体化特殊铜合金锻造、强度高、耐磨性好;
07、回差极小： 一体化结构避免了键联结的间隙、传动精度高;
08、安全保证：通过1500V耐压检测，F级绝缘电机，安全有保障;
09、配套简单：采用单相电源、外接线路简单、也可做380V、直流电源;
10、使用方便：免加油、免点检、防水防锈、任意角度安装;
11、多种速度：全程时间3秒、9秒、13秒、15秒、30秒、50秒、100秒、150秒（出厂前已设定）;
12、智能数控：智能控制模块集成于电动执行器本体内，无需外接定位器，数字设定、数字整定、高度精确、自我诊断、一机多能。
13、智能型电动执行器采用集成化、模块化技术，具有性能可靠、功能齐全的特点。集位置反馈、伺服放大于一体，且调整使用格外方便，接线尤为简洁，并可扩展通讯接口。
14、有现场数字显示和手操功能;执行器控制模块带有数字显示屏，能够显示执行器开度;并且能够通过控制模块上的按键，进行现场操作。
15、有菜单设置功能;智能控制模块具有菜单设置键，通过菜单键可随意设置执行器控制方式、控制精度、保护措施等。
16、有自调整功能：执行器电气行程（电气零位、满位）确定后，执行器能够自动标定电气零位、满位输出，无须人工调整。
17、有程序设定上下限功能：可通过按键设定执行器上下限行程。
18、有断信号设定执行器动作方式功能：执行器可选择在断信号情况下，执行器全开、停止、全闭三种状态。
19、有电子刹车功能;执行器需停止运转时，控制模块输出一个反转信号，实现电子刹车。
20、有错误代码故障功能;执行器出现故障时，控制模块显示屏显示错误代码，指示故障原因。

01. Powerful functions: intelligent regulation type, proportional type, switch type and all kinds of signal output types;
02. Small size and light weight: the volume and weight are only equivalent to about 35% of traditional products;
03. Beautiful and generous: aluminum alloy die-casting shell, exquisite and smooth, and can reduce electromagnetic interference;
04. Reliable performance: key parts such as bearings and electrical components are imported famous brand products;
05. High standard protection: IP68 high standard protection grade
06. Precision wear resistance: worm gear output shaft integrated special copper alloy forging, high strength and good wear resistance;
07. Minimal return difference: the integrated structure avoids the gap of key connection and has high transmission accuracy;
08. Safety assurance: through 1500V withstand voltage test, class F insulated motor, safe and guaranteed;
09. Simple matching: single phase power supply, simple external circuit, 380V and DC power supply;
10. Easy to use: no refueling, no spot inspection, waterproof and antirust, installation at any angle;
11. Various speeds: the whole process time is 3 seconds, 9 seconds, 13 seconds, 15 seconds, 30 seconds, 50 seconds, 100 seconds and 150 seconds (set before leaving the factory);
12. Intelligent numerical control: the intelligent control module is integrated into the body of the electric actuator without external positioner. It has digital setting, digital setting, high accuracy, self diagnosis and multi-function of one machine.
13. The intelligent electric actuator adopts integrated and modular technology, which has the characteristics of reliable performance and complete functions. It integrates position feedback and servo amplifier, and can be adjusted and used exceptionally It is convenient, the wiring is particularly simple, and the communication interface can be expanded.
14. It has the functions of on-site digital display and manual operation; The actuator control module is equipped with a digital display screen, which can display the opening of the actuator; And it can carry out on-site operation through the keys on the control module.
15. Menu setting function; The intelligent control module has a menu setting key, through which the actuator control mode, control accuracy, protection measures, etc. can be set at will.
16. Self adjustment function: after the electrical stroke (Electrical zero position and full position) of the actuator is determined, the actuator can automatically calibrate the electrical zero position and full position output without manual adjustment.
17. It has the function of setting the upper and lower limit by program: the upper and lower limit stroke of the actuator can be set by pressing the key.
18. With off signal, set the action mode function of the actuator: the actuator can select three states: fully open, stop and fully closed in the case of off signal.
19. Electronic brake function; When the actuator needs to stop running, the control module outputs a reverse signal to realize electronic braking.
20. Fault function with error code; When the actuator fails, the control module display displays an error code indicating the cause of the failure.

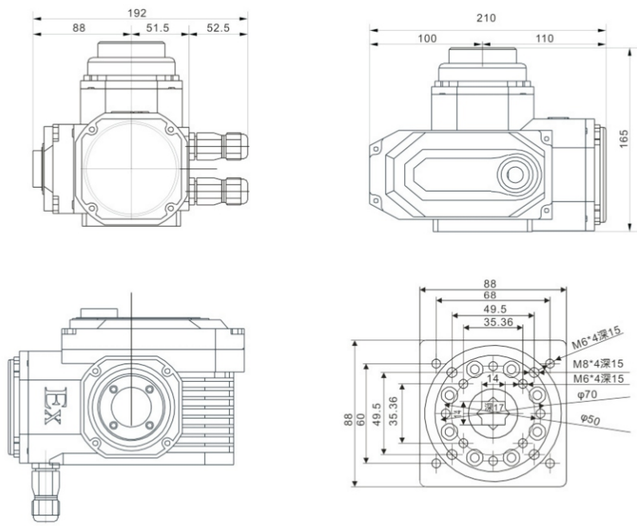

型号 / 参数 / 电源 / 性能	Bt6-EX05						
	DC12V	DC24V	DC220V	AC24V	AC110V	AC380V	AC220V
电机功率 Drive Motor	20W			15W			
额定电流 Rated current	3.8A	2A	0.21A	2.2A	0.48A	0.15A	0.24A
输出力矩 Torque Output	30Nm/50Nm			15Nm/30Nm/50Nm			
运行时间 Running time	6S/10S			10S/20S/30S			
控制电路 control circuit	A型、D型、G型、H型、 K型、P型、 R型、S型、 智能非侵入式和RS485总线型 Type A, D, G, h, K, P, R, s, intelligent non intrusive and RS485 bus lines						
回转角度 Rotation angle	0 – 360° 可调 0 – 360 ° adjustable						
整机重量 Machine weight	6KG						
绝缘电阻 insulation resistance	100MΩ/300VDC			100MΩ/500VDC			
耐压等级 Withstand voltage level	500VAC/1分钟			1500VAC/1分钟			
防护等级 Degree of protection	IP67						
环境温度 Ambient temperature	-25℃-+60℃（其他温度可定做） -25 ℃ – + 60 ℃ (OTHER TEMPERATURES CAN BE CUSTOMIZED)						
安装角度 Installation angle	360° 任意角度安装 360 ° ARBITRARY ANGLE INSTALLATION						
壳体材质 Shell material	铝合金精密压铸件 Aluminum alloy precision die casting						
选装功能 Optional functions	加热除湿器 space heater						

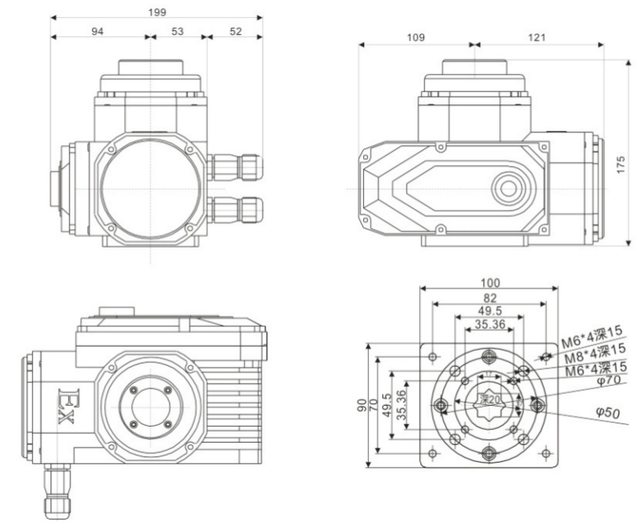

型号 / 参数 / 电源 / 性能	BT6-EX10/15						
	DC12V	DC24V	DC220V	AC24V	AC110V	AC380V	AC220V
电机功率 Drive Motor	40W			25W/30W			
额定电流 Rated current	4.8A	2.4A	0.32A	3A	0.64A	0.19A	0.32A
输出力矩 Torque Output	100Nm			50Nm/60Nm/100Nm/150Nm			
运行时间 Running time	10S			13S/15S/20S/30S			
控制电路 control circuit	A型、D型、G型、H型、K型、P型、R型、S型、智能非侵入式和RS485总线型 Type A, D, G, h, K, P, R, s, intelligent non intrusive and RS485 bus lines						
回转角度 Rotation angle	0 – 360° 可调 0 – 360 ° adjustable						
整机重量 Machine weight	7KG						
绝缘电阻 insulation resistance	100MΩ/300VDC			100MΩ/500VDC			
耐压等级 Withstand voltage level	500VAC/1分钟			1500VAC/1分钟			
防护等级 Degree of protection	IP67						
环境温度 Ambient temperature	-25℃-+60℃（其他温度可定做） -25 ℃ – + 60 ℃ (OTHER TEMPERATURES CAN BE CUSTOMIZED)						
安装角度 Installation angle	360° 任意角度安装 360 ° ARBITRARY ANGLE INSTALLATION						
壳体材质 Shell material	铝合金精密压铸件 Aluminum alloy precision die casting						
选装功能 Optional functions	过力矩保护、加热除湿器 Over torque protection, heating dehumidifier						

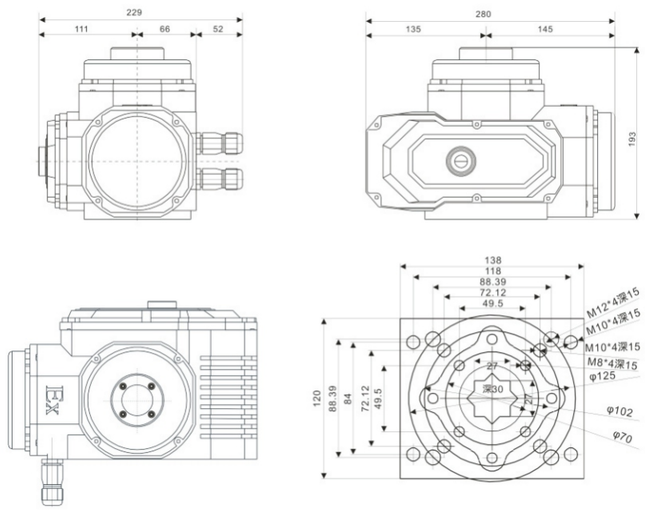

型号 / 参数 / 电源 / 性能	BT6-EX20/40						BT6-EX50/60/80					
	DC24V	DC220V	AC24V	AC110V	AC380V	AC220V	DC24V	DC220V	AC24V	AC110V	AC380V	AC220V
电机功率 Drive Motor	40W/60W						90W/100W					
额定电流 Rated current	8A	0.35A	5A	0.9A	0.25A	0.48A	8A	0.35A	5A	0.9A	0.25A	0.48A
输出力矩 Torque Output	200Nm		200Nm/400Nm				500Nm/600Nm/800Nm					
运行时间 Running time	15S/30S/60S						30S/30S/45S					
控制电路 control circuit	A型、D型、G型、H型、 K型、P型、 R型、S型、 智能非侵入式和RS485总线型 Type A, D, G, h, K, P, R, s, intelligent non intrusive and RS485 bus lines											
回转角度 Rotation angle	0 – 90° 可调 0 – 90 ° adjustable											
整机重量 Machine weight	11KG						11.5KG					
绝缘电阻 insulation resistance	100MΩ/300VDC		100MΩ/500VDC				100MΩ/300VDC		100MΩ/500VDC			
耐压等级 Withstand voltage level	500VAC/1分钟		1500VAC/1分钟				500VAC/1分钟		1500VAC/1分钟			
防护等级 Degree of protection	IP67											
环境温度 Ambient temperature	-25℃-+60℃（其他温度可定做） -25 ℃ – + 60 ℃ (OTHER TEMPERATURES CAN BE CUSTOMIZED)											
安装角度 Installation angle	360° 任意角度安装 360 ° ARBITRARY ANGLE INSTALLATION											
壳体材质 Shell material	铝合金精密压铸件 Aluminum alloy precision die casting											
选装功能 Optional functions	过力矩保护、加热除湿器 Over torque protection, heating dehumidifier											

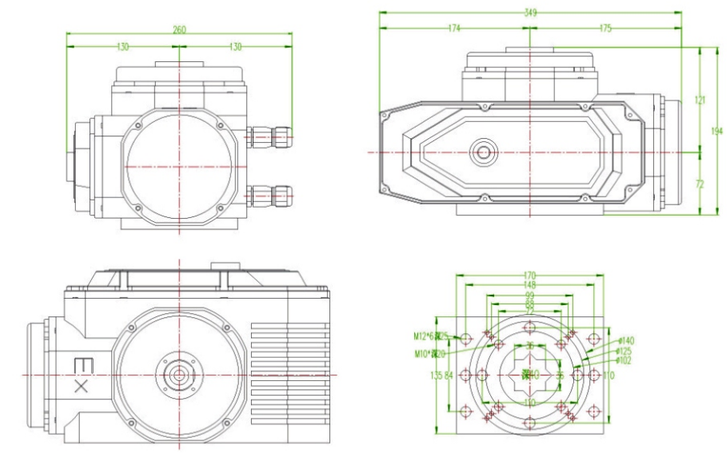

型号 / 参数 / 电源 / 性能	BT6-EX100				BT6-EX200/300			
	DC24V	DC220V	AC24V	AC110V	AC24V	AC110V	AC380V	AC220V
电机功率 Drive Motor	90W				90W			
额定电流 Rated current	9A	2.2A	0.48A	1.2A	9A	2.2a	0.48A	1.2A
输出力矩 Torque Output	300Nm/800Nm/1000Nm				2000Nm/3000Nm			
运行时间 Running time	90S				135S			
控制电路 control circuit	A型、D型、G型、H型、 K型、P型、 R型、S型、 智能非侵入式和RS485总线型 Type A, D, G, h, K, P, R, s, intelligent non intrusive and RS485 bus lines							
回转角度 Rotation angle	0 – 360° 可调 0 – 360 ° adjustable							
整机重量 Machine weight	40KG				50KG			
绝缘电阻 insulation resistance	100MΩ/500VDC							
耐压等级 Withstand voltage level	1500VAC/1分钟							
防护等级 Degree of protection	IP67							
环境温度 Ambient temperature	-25℃-+60℃（其他温度可定做） -25 ℃ – + 60 ℃ (OTHER TEMPERATURES CAN BE CUSTOMIZED)							
安装角度 Installation angle	360° 任意角度安装 360 ° ARBITRARY ANGLE INSTALLATION							
壳体材质 Shell material	铝合金精密压铸件 Aluminum alloy precision die casting							
选装功能 Optional functions	过力矩保护、加热除湿器 Over torque protection, heating dehumidifier							

BT6-EX 智能调节型（P型）性能参数

Performance Parameters of Intelligent Regulation Type (P Type)

型号 / 参数 / 电源 / 性能	05P	10P	20P	40P	50P	60P	80P	100P	200P/300P
电源	DC12V、DC24V、DC220V、AC24V、AC110V、AC220V、AC380V;50/60Hz								
电机功率 Drive Motor	15W	25W	40W	40W	90W	90W	90W	150W	250W
额定电流 Rated current	0.24A (AC220V)	0.32A (AC220V)	0.48A (AC220V)	0.48A (AC220V)	0.92A (AC220V)	0.92A (AC220V)	0.92A (AC220V)	1.0A (AC220V)	1.2A (AC220V)
输出力矩 Torque Output	50Nm	100Nm	200Nm	400Nm	500Nm	600Nm	800Nm	1000Nm	2000Nm
运行时间 Running time	30S	30S	30S	30S	30S	30S	45S	45S	45S
回转角度 Rotation angle	0 – 90°								
整机重量 Machine weight	7KG	8KG	12KG	12.5KG	12.5KG	12.5KG	13KG	40KG	50KG
输入信号 Input signal	4~20mADC、1~5VDC、0~10vdc（其他可出厂前选定） 4 ~ 20mADC, 1 ~ 5VDC, 0 ~ 10VDC (others can be selected before delivery)								
输出信号 Output signal	4~20mADC（其他可出厂前选定） 4 ~ 20mADC (others can be selected before delivery)								
基本误差 Basic error	不超过 ± 1% NOT MORE THAN ± 1%								
回　差 Return difference	小于0.3% Less than 0.3%								
死　区 Dead zone	0.4%~1.5%可调 0.4% ~ 1.5% adjustable								
阻尼特性 Damping characteristics	0次 0 TIMES								
机构重复性误差 Mechanism repeatability error	0%								
绝缘电阻 insulation resistance	DC24V：100MΩ/300VDC				100MΩ/500VDC				
耐压等级 Withstand voltage level	DC24V：500VAC/1分钟 DC24V：500VAC/1minute				1500VAC/1分钟 1500VAC/1minute				
防护等级 Degree of protection	IP67								
环境温度 Ambient temperature	−25℃−+60℃（其他温度可定做） −25 ℃ − + 60 ℃ (OTHER TEMPERATURES CAN BE CUSTOMIZED)								
安装角度 Installation angle	360°　任意角度安装 360 °　ARBITRARY ANGLE INSTALLATION								
壳体材质 Shell material	铝合金精密压铸件 Aluminum alloy precision die casting								
选装功能 Optional functions	过力矩保护、加热除湿器、无源触点型 Over torque protection, heating dehumidifier, passive contact type								

BT6-EX 控制电路

Wiring Diagrams

BT6控制电路　BT6 CONTROL CIRCUIT

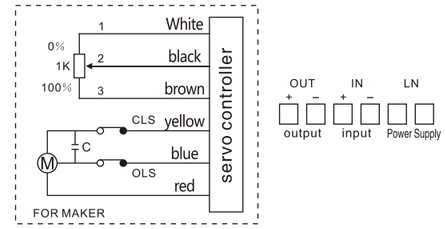

智能调节型（P型）　Intelligent regulation type (P type)

通过外部计算机或工业仪表输入的标准信号来控制阀门的开闭角度，并同步反馈输出相对应的标准信号。
The opening and closing angle of the valve is controlled by the standard signal input by the external computer or industrial instrument, and the corresponding standard signal is fed back and output synchronously.
1、“电源”输入端的“N”接零线，“L”接相线；
1、The "n" of the "power" input terminal is connected to the zero line and the "L" is connected to the phase line;
2、“外控”端的“+”接输入信号的正极，“–”接输入信号的负极；
2、"+" at the "external control" end is connected to the positive pole of the input signal and "–" is connected to the negative pole of the input signal;
3、“反馈”端的“+”接输出信号的正极，“–”接输出信号的负极。
3、The "+" at the "feedback" end is connected to the positive pole of the output signal and the "–" is connected to the negative pole of the output signal.

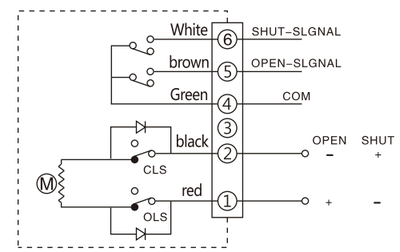

直流开关型（D型）　DC switch type (D Type)

通过切换外部直流电源的正负极，实现阀门的“开”和“关”操作，同时输出一组指示阀门全开或全闭的无源触点信号。
By switching the positive and negative poles of the external DC power supply, the "on" and "off" operations of the valve are realized, and a group of passive contact signals indicating the full opening or full closing of the valve are output at the same time.
1、端子1接电源正极时，端子2接电源负极为“开"操作；
1、When terminal 1 is connected to the positive pole of the power supply, terminal 2 is connected to the negative pole of the power supply for "on" operation;
2、端子1接电源负极时，端子2接电源正极为“关”操作；
2、When terminal 1 is connected to the negative pole of the power supply, terminal 2 is connected to the positive pole of the power supply for "off" operation;
3、端子4为无源触点的公共端；
3、Terminal 4 is the common end of passive contact;
4、“开”运行到位时，端子5输出“全开信号"；
4、When "on" is in place, terminal 5 outputs "full open signal";
5、“关”运行到位时，端子6输出“全关信号”
5、When "off" is in place, terminal 6 outputs "full off signal". 。

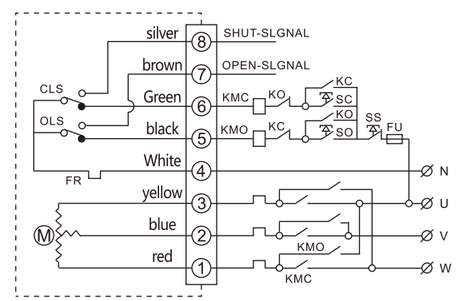

三相开关型（G型）　Three phase switch type (G Type)

通过开关电路实现阀门开启或关闭操作，并输　一组指示阀门全开、全闭的有源位置信号。
The opening or closing operation of the valve is realized through the switching circuit, and a group of active position signals indicating the full opening and full closing of the que door are output.
1、端子1、2、3接三相交流电，通过外部倒相电路来实现电机的 正反转；
1、Terminals 1, 2 and 3 are connected to three-phase AC, and the forward and reverse rotation of the motor is realized through the external phase inversion circuit;
2、端子4为外部控制电路的公共点；
2、Terminal 4 is the common point of the external control circuit;
3、端子5为“开”运行控制；
3、Terminal 5 is "on" operation control;
4、端子6为“关'，运行控制；
4、Terminal 6 is "off", operation control;
5、“开”运行到位时，端子7输出“全开信号”；
5、When "on" is in place, terminal 7 outputs "full open signal";
6、“关”运行到位时，端子8输出“全关信号"。
6、When "off" is in place, terminal 8 outputs "all off signal" 。

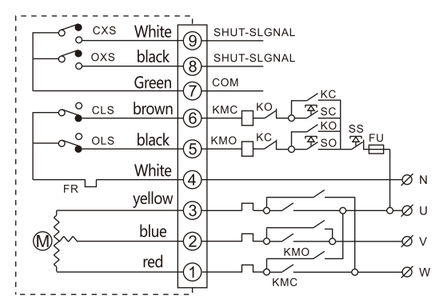

三相无源触点型（H型）Three phase passive contact type (H type)

通过开关电路实现阀门开启或关闭操作，并输出一组指示阀门全开、全闭的无源位置信号。
The opening or closing operation of the valve is realized through the switching circuit, and a group of passive position signals indicating the full opening and full closing of the valve are output.
1、端子1、2, 3接三相交流电，通过外部倒相电路来实现电机的正反转；
1. Terminals 1, 2 and 3 are connected to three-phase AC, and the forward and reverse rotation of the motor is realized through the external phase inversion circuit;
2、端子4为外部控制电路的公共点；
2. Terminal 4 is the common point of the external control circuit;
3、端子5为“开"运行控制；
3. Terminal 5 is "on" operation control;
4、端子6为“关"运行控制；
4. Terminal 6 is "off" operation control;
5、端子7为无源触点公共端；
5. Terminal 7 is the common end of passive contact;
6、“开”运行到位时，端子8输出“全开信号"；
6. When "on" is in place, terminal 8 outputs "full open signal";
7、“关”运行到位时，端子9输出“全关信号”　。
7. When "off" is in place, terminal 9 outputs "full off signal".

注：控制电路中虚线内为电动装置内部电路，虚线以外的部份仅供用户配线时的参考，
Note: the dotted line in the control circuit is the internal circuit of the electric device, and the parts outside the dotted line are only for the reference of the user when wiring,
注意！不能将二台或数台电动装置的动力线并联，不能用同一接点去控制数台电动装置，否则会造成失控和电机过热
be careful! The power lines of two or more electric devices shall not be connected in parallel, and the same contact shall not be used to control several electric devices, otherwise it will cause out of control and motor overheating

BT6–EX 控制电路

Wiring Diagrams

BT6控制电路 BT6 CONTROL CIRCUIT

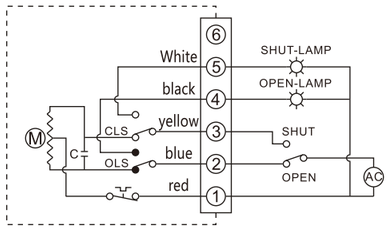

普通开关型（A型） Normal ON/OFF type (A Type)

通过开关电路实现阀门开启或关闭操作，并输出一组指示阀门全开、全闭的有源位置型号。
The opening or closing operation of the valve is realized through the switching circuit, and a group of active position models indicating the full opening and full closing of the valve are output.
1、端子1接电源零线；
1、 Terminal 1 is connected to the zero line of power supply;
2、电源相线与端子2接通时为“开”运行，至行程开关OLS动作止；
2、 When the power phase line is connected with terminal 2, it runs "on" until the travel switch OLS acts;
3、电源相线与端子3接通时为“关”运行，至行程开关CLS动作止；
3、 When the power phase line is connected with terminal 3, it runs "off" until the travel switch CLS acts;
4、电源相线与端子2接通时为“开"运行到位时，端子4所接“全 开信号”
4、 When the power phase line is connected to terminal 2, it is "on". When the operation is in place, the "full open signal" connected to terminal 4

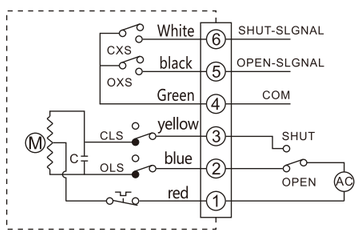

无源触点型（S型） Passive contact type (S type)

通过开关电路实现阀门开启或关闭操作，并输出一组指示阀门全开、全闭的有源位置型号。
The opening or closing operation of the valve is realized through the switching circuit, and a group of active position models indicating the full opening and full closing of the valve are output.
1、端子1接电源零线；
1、 Terminal 1 is connected to the zero line of power supply;
2、电源相线与端子2接通时为“开"运行，至行程开关OLS动作止；
2、 When the power phase line is connected with terminal 2, it runs "on" until the travel switch OLS acts;
3、电源相线与端子3接通时为“关”运行，至行程开关CLS动作止；
3、 When the power phase line is connected with terminal 3, it runs "off" until the travel switch CLS acts;
4、端子4为无源触点公共端； 4、 Terminal 4 is the common end of passive contact;
5、“开”运行到位时，端子5输出“全开信号”；
5、 When "on" is in place, terminal 5 outputs "full open signal";
6、“关”运行到位时，端子6输出"全关信号"0
6、 When "off" is in place, terminal 6 outputs "full off signal" 0

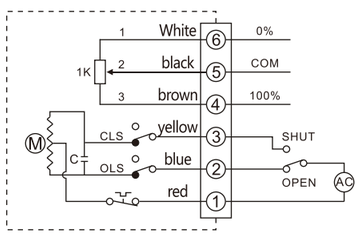

开度信号型（R型） Opening signal type (R type)

通过开关电路实现阀门开启或关闭操作，并输出一组指示阀门全开、全闭的有源位置型号。
The opening or closing operation of the valve is realized through the switching circuit, and a group of active position models indicating the full opening and full closing of the valve are output.
1、端子1接电源零线；
1、 Terminal 1 is connected to the zero line of power supply;
2、电源相线与端子2接通时为“开"运行，至行程开关OLS动作止；
2、 When the power phase line is connected with terminal 2, it runs "on" until the travel switch OLS acts;
3、电源相线与端子3接通时为“关”运行，至行程开关CLS动作止；
3、 When the power phase line is connected with terminal 3, it runs "off" until the travel switch CLS acts;
4、端子4为电位器低端，“开”运行时，端于4和端子5之间的阻值 随着阀门打开而大；
4、 Terminal 4 is the low end of potentiometer. During "on" operation, the resistance between terminal 4 and terminal 5 increases with the opening of the valve;
5、端子5为电位器动 ；5、 Terminal 5 is the potentiometer actuator;
6、端子6为电位器高端，“关”运行时，端子5和端子6之间的阻值 随着阀门关闭而大。
6、 Terminal 6 is the high-end of potentiometer. When "off" operation, the resistance between terminal 5 and terminal 6 increases with the closing of the valve.

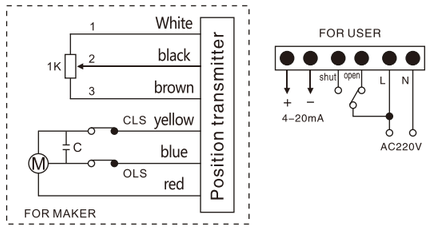

带位置发送器（K型） With position transmitter (K Type)

通过开关电路实现阀门开启或关闭操作，并同时输出与阀门开闭角度 相时应的电流信号。
The opening or closing operation of the valve is realized through the switching circuit, and the current signal corresponding to the opening and closing angle of the valve is output at the same time.
输出4–20mADC阀位信号（对阀位实行程反馈）
Output 4–20madc valve position signal (implement process feedback for valve position)
1、电源输入端的“N”为零线，“L"接相线；
1、 "N" at the power input terminal is the zero line and "L" is the phase line;
2、电源输入端的“L”接到“开"时，向开阀方向运行；
2、 When "L" at the power input is connected to "on", it runs in the direction of valve opening;
3、电源输入端的“L”接到“关”时，向关阀方向运行；
3、 When the "L" at the power input is connected to "off", it runs in the direction of valve closing;
4、“输出信号”端的“+”接输出信号的正极，“—"接输出信号 的负极
4、 The "+" at the "output signal" end is connected to the positive pole of the output signal, and the "one" is connected to the negative pole of the output signal

注：控制电路中虚线内为电动装置内部电路，虚线以外的部份仅供用户配线时的参考，
Note: the dotted line in the control circuit is the internal circuit of the electric device, and the parts outside the dotted line are only for the reference of the user when wiring,
注意！不能将二台或数台电动装置的动力线并联，不能用同一接点去控制数台电动装置，否则会造成失控和电机过热
be careful! The power lines of two or more electric devices shall not be connected in parallel, and the same contact shall not be used to control several electric devices, otherwise it will cause out of control and motor overheating

精小型多回转电动阀

Mini Multi-Turn Electric Valve

智能型电动截止阀
Intelligent Electric Globe Valve

电动截止阀带（自动复位）
Electric Globe Valve(Auto-return)

电动截止阀
Electric Globe Valve

电动闸阀
Electric Gate Valve

电动刀闸阀
Electric knife gate valve

Z系列多回转精小型电动阀门执行器，是针对于小口径闸阀、截止阀延伸出来的一款新产品。改变了小口径电动闸阀以“大欺小”的局面。其适用于启闭件做直线运动的阀门，如：小口径闸阀和小口径截止阀等。用于阀门的开启、关闭或调节。是对阀门实现远控、集控和自控的必不可少的驱动装置。他们具有功能全，性能可靠，控制系统先进，体积小，重量轻，使用维护方便等特点。广泛应用于电力、冶金、石油、化工、造纸、污水处理等行业。

Z系列多回转精小型电动阀门执行器有：开关型，无源型，开度型，电子式，智能型等。按连接型式，还分为转矩型和推力型。

Z-type mini multi-turn electric actuator is a new product developed for small-diameter gate valves and globe valves. It changes the situation that the actuator of the small-diameter electric gate valve is too large. It is suitable for valves whose opening and closing parts do linear movement, such as small-diameter gate valves and globe valves. It is used to open, close or regulate the valve position. It is an indispensable driving device for realizing remote control, centralized control and automatic control of the valve. It has the characteristics of full function, reliable performance, advanced control system, small size, light weight, convenient use and maintenance, etc. It is widely used in electric power, metallurgy, petroleum, chemical industry, paper-making, sewage treatment and other industries. Z-type mini multi-turn electric actuators include: ON/OFF type, Passive type, Opening type, Electronic type, Intelligent type, etc. According to the connection type, it is also divided into torque type and thrust type.

执行器主要技术参数/规格 technical parameters, specifications

Model / Performance	COVNA-Z05	COVNA-Z10	COVNA-Z30
电 源 Voltage Options	AC24V、AC110V、AC220V、AC380V		
电机功率 Motor Power	0.10KW	0.25KW	0.37KW
转 矩 Torque	50N.M	100N.M	300N.M
输出转速 Output speed	5 (r/min)	18/24 (r/min)	8/24 (r/min)
电路控制 Circuit control	开关型（A 220V; W 380V), 智能型Z		
最大阀杆直径 Max stem diameter	20mm	28mm	
转动圈数 Number of turns	50	50	
参考重量 Reference weight	10Kg	15Kg	
耐压等级 Withstand voltage rating	1500VAC/min		
绝缘电阻 Insulation resistance	100MΩ/500V DC		
防护等级 Protection level	IP67		
环境温度 Ambient temperature	-28°C~+60°C		
安装角度 installation angle	360° 任意角度安装 Installation at any angle		
箱体材质 Cabinet material	铝合金压铸件 Aluminum alloy die casting		
工作制 Work system	短时10分钟（特殊可定做30分钟）Short time 10 minutes (30 minutes for special short)		

注：常规电源为220V,380V, 如需有其它需求，请联系0769-22456666.

Note: The conventional power supply is 220V, 380V, if you have other requirements, please call:+86-769-22456666.

执行器外形尺寸图 Outline Dimension Drawing of actuator

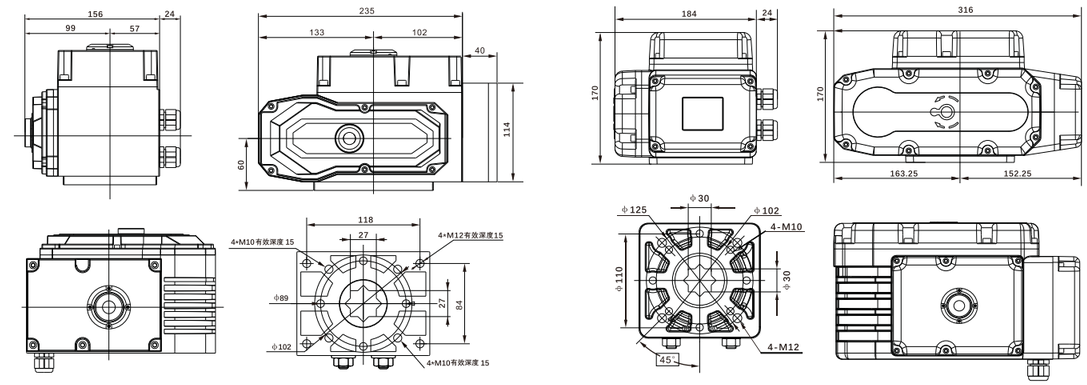

COVNA-Z05　　COVNA-Z10/20/30

连接法兰结构示意图 Connection flange structure diagram

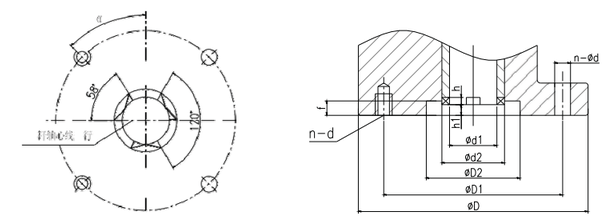

转矩型连接尺寸图 Torque type connection size chart

Model	转矩型 JB2920 Torque type											
	Flange NO.	D	D1	D2	h1	f	h	d1	d2	d	n	a
COVNA-Z05	F10	125	102	0	0	0	8	30	45	M10	4	45°
COVNA-Z10/20/30	F10	145	120	90	2	4	8	30	45	M10	4	45°

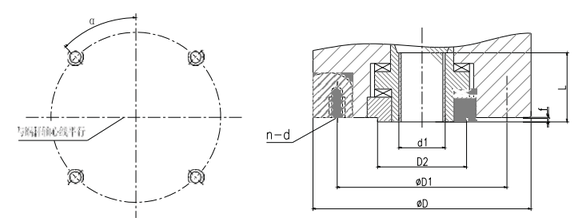

推力型连接尺寸图 Thrust type connection size chart

Model	推力型 GB1222 Thrust type									
	Flange NO.	D	D1	D2	f	d1 Max	d	L	n	a
COVNA-Z05	F10	125	102	70	3	T28	M10	40	4	45°
COVNA-Z10/20/30	F10	125	102	70	3	T28	M10	40	4	45°

接线图 Wiring Diagram

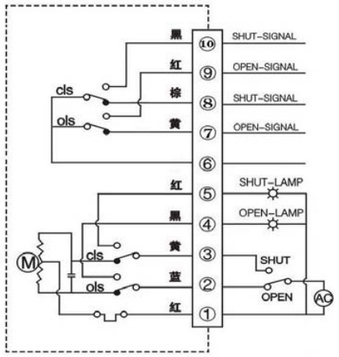

A型:极限位置开关(AC220V标准型)

功能：通过开关电路实现开启、关闭操作、输出一组有源位置信号（全开、全闭），并输出一组无源触电（常开、常闭）信号.

A: limit position switch (AC220V standard type)

Function: Through the switch circuit to achieve opening and closing operations, output a set of active position signals (full open, full closed) and output a set of contactless (normally open, normally closed) signals.

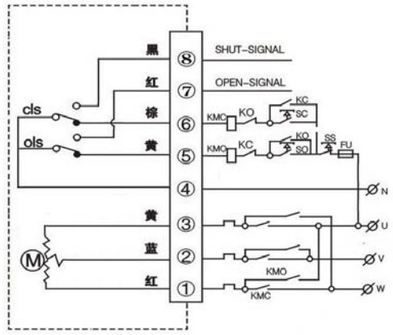

W型:AC380V标准型

功能：通过开关电路实现阀门的开启，关闭操作，同时输出 一组指示阀门全开或全闭的有源触点信号

W : AC380V standard type

Function: Open and close the valve through the switch circuit, and simultaneously output a set of active contact signals indicating that the valve is fully open or fully closed

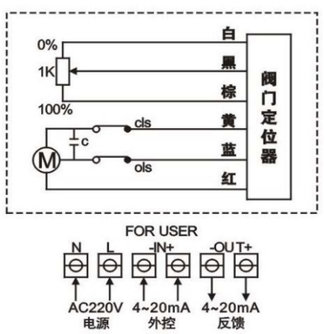

E型:带智能伺服控制器(调节器)

功能：调节作用，输入4-20MDC,0-10VDC或1-5VDC,
输出4-20MADC.
结构：带智能伺服控制器和1KΩ、5KΩ电位器

E: with intelligent servo controller (regulator)

Function: Adjustment function, input 4～20mA DC, 0-10V DC or 1-5V DC, output 4-20mA DC.

Structure: with intelligent servo controller and 1kΩ, 5kΩ otentiometer

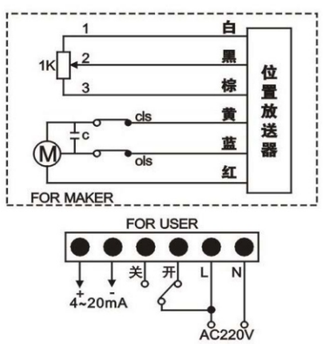

H型:带R/I变换器

功能：输出4-20MADC阀位信号（对阀门实现全程反馈）
结构：带R/I变换器和1KΩ电位器

H: with R/I converter

Function: output 4～20mA DC valve position signal (full feedback to the valve)

Structure: with R/I converter and 1K potentiometer

智能型（非侵入式免开盖型） Intelligent type (non-intrusive type without opening cover)

1.非侵入式设计，隔水防爆，电容式角摸屏控制，LED全中文菜单显示
2.完善的电位器故障、过力矩、ESD保护功能
3.调节型/开关型自由切换，多回转/角行程通用，220V/380V AC 通用
4.输出信号：调节型 DC4.20mA, DC1-5V, 0-20mA等特殊规格可定制。开关型,无源干节点信号

The main function

1.Non-intrusive design, waterproof and explosion-proof, capacitive touch screen control, LED full Chinese menu display;
2.Perfect potentiometer failure, over-torque, ESD protection function;
3.Adjustable type/switch type freely switchable, multi-turn/angular stroke universal, 220V/380V AC universal;
4.Output signal: regulated DC 4-20mA, DC 1-5V, 0-20mA and other special specifications can be customized;

工作电压 Operating Voltage	AC380V±15%, AC220V±15%, 50Hz/±5%		
输入信号 Working Temperture	DC4-20mA, DC1-5V, 0-20mA等特殊规格可定制 DC4-20mA, DC1-5V, 0-20mA Other special specifications can be customized		
输出信号 Output signal	DC4-20mA, DC1-5V, 0-20mA等特殊规格可定制 DC4-20mA, DC1-5V, 0-20mA Other special specifications can be customized		
功　耗 Power consumption	≤5VA	工作温度 working Temperture	-30℃~+80℃ （-40℃~+85℃ can Customized）
相对湿度 Relative humidity	95%（25℃）	基本误差 Basic error	＜±0.5%
振动强度 Vibration intensity	＜1. 5g	死区 Dead zone	0.5%~3%（调节型）Adjustable

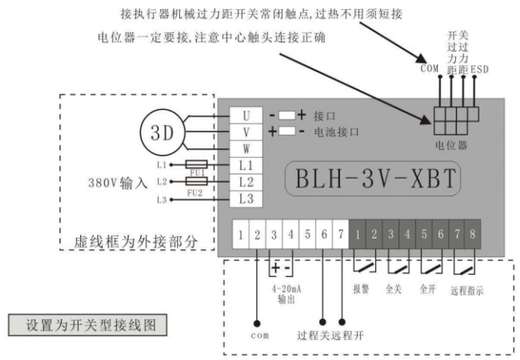

设置为开关型接线图

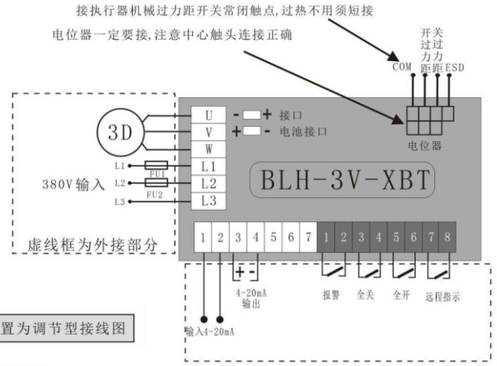

设置为调节型接线图

三相电电气接线图

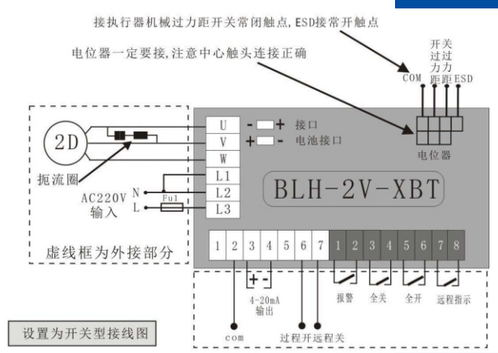

设置为开关型接线图

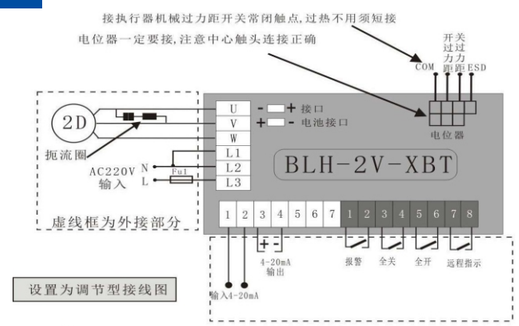

设置为调节型接线图

单相电电气接线图

特别提示：扼流圈不接入将损坏模块！！！

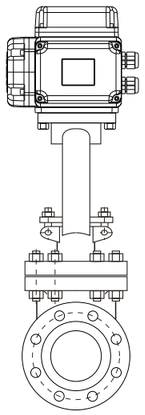

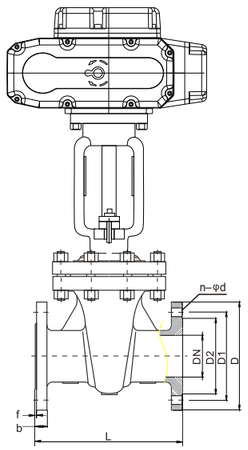

电动闸阀主要外形及连接尺寸(国标) Main Outline and Connecting（MPa）

MEDLE		Inch	D	D1	D2	n-d	b	f	L
1.0	DN15	1/2"	95	65	45	4-14	14	2	130
	DN20	3/4"	105	75	55	4-14	16	2	150
	DN25	1"	115	85	65	4-14	16	2	160
	DN32	1-1/4"	140/135	100	78	4-18	18	2	180
	DN40	1-1/2"	150/145	110	85	4-18	18	2	200
	DN50	2"	165/160	125	100	4-18	20	2	180
	DN65	2-1/2"	185/180	145	120	4-18	20	2	195
	DN80	3"	195	160	135	8-18	20	2	210
	DN100	4"	215	180	155	8-18	22	2	230
	DN125	5"	245	210	185	8-18	22	2	255
	DN150	6"	280	240	210	8-22	24	2	280
	DN200	8"	335	295	265	8-22	24	2	330
	DN250	10"	390	350	320	12-22	26	2	380
	DN300	12"	440	400	368	12-22	26	2	420
	DN350	14"	500	460	42882	16-22	26	2	450
	DN400	16"	565	515	532	16-26	26	2	480
	DN450	18"	615	656	585	20-26	28	2	510
	DN500	20"	670	620	685	20-26	28	2	540
1.6	DN15	1/2"	95	65	45	4-14	14	2	130
	DN20	3/4"	105	75	55	4-14	14	2	150
	DN25	1"	115	85	65	4-14	14	2	160
	DN32	1-1/4"	140/135	100	75	4-18	16	2	180
	DN40	1-1/2"	150/145	110	85	4-18	16	3	200
	DN50	2"	165/160	125	100	4-18	16	3	250
	DN65	2-1/2"	185/180	145	120	4-18	18	3	265
	DN80	3"	200/195	160	135	8-18	20	3	280
	DN100	4"	220/215	180	155	8-18	20	3	300
	DN125	5"	220/215	210	185	8-18	22	3	325
	DN150	6"	250/245	240	210	8-23	24	3	350
	DN200	8"	285/280	295	265	12-23	26	3	400
	DN250	10"	340/335	355	320	12-25	30	3	450
	DN300	12"	405	410	375	12-25	30	4	00
	DN350	14"	460	470	435	16-30	34	4	550
	DN400	16"	520	525	485	16-30	36	4	600
	DN450	18"	580640	585	545	20-30	40	4	650
	DN500	20"	715/705	650	608	20-34	44	4	700

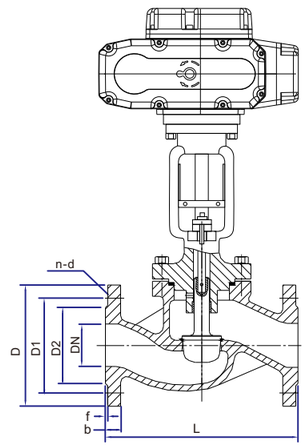

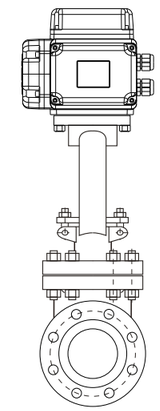

电动截止阀主要外形及连接尺寸(国标) Main Outline and Connecting（MPa）

MEDLE		Inch	D	D1	D2	n-d	b	f	L
1.0	DN15	1/2"	95	65	45	4-14	14	2	130
	DN20	3/4"	105	75	55	4-14	16	2	150
	DN25	1"	115	85	65	4-14	16	2	160
	DN32	1-1/4"	140/135	100	78	4-18	18	2	180
	DN40	1-1/2"	150/145	110	85	4-18	18	2	165
	DN50	2"	165/160	125	100	4-18	20	2	180
	DN65	2-1/2"	185/180	145	120	4-18	20	2	195
	DN80	3"	195	160	135	8-18	20	2	210
	DN100	4"	215	180	155	8-18	22	2	230
	DN125	5"	245	210	185	8-18	22	2	255
	DN150	6"	280	240	210	8-22	24	2	280
	DN200	8"	335	295	265	8-22	24	2	330
	DN250	10"	390	350	320	12-22	26	2	380
	DN300	12"	440	400	368	12-22	26	2	420
	DN350	14"	500	460	428	16-22	26	2	450
	DN400	16"	565	515	482	16-26	26	2	480
	DN450	18"	615	656	532	20-26	28	2	510
	DN500	20"	670	620	585	20-26	28	2	540
1.6	DN15	1/2"	95	65	45	4-14	14	2	130
	DN20	3/4"	105	75	55	4-14	14	2	150
	DN25	1"	115	85	65	4-14	14	2	160
	DN32	1-1/4"	140/135	100	75	4-18	16	2	180
	DN40	1-1/2"	150/145	110	85	4-18	16	2	200
	DN50	2"	165/160	125	100	4-18	16	3	230
	DN65	2-1/2"	185/180	145	120	4-18	18	3	290
	DN80	3"	200/195	160	135	8-18	20	3	310
	DN100	4"	220/215	180	155	8-18	20	3	350
	DN125	5"	220/215	210	185	8-18	22	3	400
	DN150	6"	250/245	240	210	8-23	24	3	480
	DN200	8"	285/280	295	265	12-23	26	3	500
	DN250	10"	340/335	355	320	12-25	30	3	550
	DN300	12"	405	410	375	12-25	30	3	750
	DN350	14"	460	470	435	16-30	34	4	850
	DN400	16"	520	525	485	16-30	36	4	950
	DN450	18"	580640	585	545	20-30	40	4	1050
	DN500	20"	715/705	650	608	20-34	44	4	1150

Z 系列多回转电动阀

Z-series Multi-Turn Electric Valve

HK60-Q-Z-S 多回转电动法兰球阀
Multi-Turn Electric Flange Ball Valve

HK60-D-Z-GF多回转电动蝶阀
Multi-Turn Electric Butterfly Valve

HK60-Z-D多回转电动法兰刀闸阀
Multi-Turn Electric Knife Gate Valve

HK60-Z-Z多回转电动闸阀
Multi-Turn Electric Gate Valve

HK60-Z-J多回转电动截止阀
Multi-Turn Electric Globe Valve

Z系列执行器，是阀门实现开启、关闭、调节控制的驱动设备。本系列执行器具有功能全、性能可靠、控制系统先进、体积小、重量轻、使用维护方便等特点。

Z系列执行器适用于启闭件做直线运动的阀门，如闸阀、截止阀、隔膜阀、柱塞阀、截流阀、水闸门等，可用于明杆阀，也可用于暗杆阀。可对阀门进行远控、集控和自动控制，广泛应用于电力、冶金、石油、化工、制药、污水处理、农业灌溉等行业。

本系列普通型产品性能符合GB/T24923-2010《普通型阀门电动装置技术条件》的规定；

本系列隔爆型产品性能符合GB3836.1-2010《爆炸性环境第1部分：通用要求》、GB3836.2-2010《爆炸环境第2部分：由隔爆外壳“d”保护的设备》及GB/T24922-2010《隔爆型阀门电动装置技术条件》的规定。

Z series actuators, are driving equipment for valves to achieve opening, closing, adjustment and control. This series of actuators have the characteristics of full-featured, reliable performance, advanced control system, small size, light weight, convenient use and maintenance.

Z series actuators are suitable for valves with linear movements, such as gate valves, globe valves, diaphragm valves, plunger valves, shut-off valves, water gates, etc., which can be used for bright stem valves and dark stem valves. The valve can be controlled remotely, collectively and automatically. It is widely used in electric power, metallurgy, petroleum, chemical, pharmaceutical, sewage treatment, agricultural irrigation and other industries.

The performance of this series of ordinary products meets the requirements of GB / T24923-2010 "Technical Conditions for Ordinary Valve Electric Devices";

The performance of this series of flameproof products conforms to GB3836.1-2010 "Explosive Environment Part 1: General Requirements", GB3836.2-2010 "Explosive Environment Part 2: Equipment Protected by Flameproof Enclosure" d "" and GB / T24922-2010 "Technical Conditions of Flameproof Valve Electric Device".

产品分类 / Product Categories

按控制方式分：普通型、智能开关型、智能调节型（Profibus现场总线、Modbus现场总线、Hart现场总线、FF现场总线、Device Net现场总线）；

按防护类型分：户外型和防爆型；

按连接方式分：转矩型和推力型；

Divided by control method: Divided by control method: ordinary type, intelligent switch type, intelligent adjustment type (Profibus fieldbus, Modbus Fieldbus, Hart fieldbus, FF fieldbus, Device Net fieldbus);

Divided by protection type: Outdoor and explosion-proof;

Divided by connection method: Torque type and thrust type;

主要技术指标 / Main Specifications

输入信号 Input signal	4mA~20mA；无源触点 / Passive contact	
供电电源 Power supply	常规 Conventional	三相 / Three phase：AC380V（50Hz）
	特殊 Special	三相 / Three phase：AC660V、AC440V、AC415V（50Hz 、60Hz）
		单相 / Simplex：AC220V、AC110V（50Hz 、60Hz）
		直流 / Direct：DC12V、DC24V、DC48V
基本误差限 Basic error limit	≤1%	
防护等级 Protection class	IP65、IP68……	
防爆型等级 Explosion-proof grade	ExdII BT4、ExdII CT4；	
环境温度 Ambient temperature	-30℃~+70℃（可选 / Optional：-40℃~+100℃）	
环境湿度 Environment humidity	≤95%（25℃时）	
电机工作制：标配长时电机，F级绝缘 Motor working system: Standard long-term motor, F-class insulation		

型号及主要技术参数 / Model and main technical parameters

型号/规格 Model / Specification	输出转矩 Output torque (N.m)	输出转速 Output speed (r/min)	手动速比 Manual speed ratio (手轮/输出) (Handwheel / Output)	电机功率(kw) Motor power (380V)	额定电流(A) Rated current (380V)	参考重量 Reference weight (kg)
Z05	50	18/24	1:1	0.12/0.18	0.45/0.6	15.2
Z10	100	18/24	1:1	0.18/0.25	0.6/0.85	15.8
Z15	150	18/24	1:1	0.25/0.37	0.85/1.05	16.2
Z20	200	18/24	1:1	0.37/0.55	1.05/1.3	24.2
	200	36/48	1:1	0.55/0.75	1.3/1.7	24.2
Z30	300	18/24	1:1	0.55/0.75	1.3/1.7	25.8
	300	36/48	1:1	0.75/0.85	1.7/1.85	25.8
Z45	450	18/24	1:1	0.75/0.85	1.7/1.85	63
	450	36/48	1:1	1.1/1.5	2.5/3.2	63.2
Z60	600	18/24	1:1	1.1/1.5	2.5/3.2	65.2
	600	36/48	1:1	1.5/2.2	3.2/4.5	65.2
Z90	900	18/24	1:1	1.5/2.2	3.2/4.5	67.5
	900	36/48	1:1	2.2/3.0	4.5/6.3	68.5
Z120	1200	18/24	1:1	2.2/3.0	4.5/6.3	69.8
	1200	36/48	1:1	3.0/4.0	6.3/8.5	69.8
Z180	1800	18/24	1:21	4	8.5	120
Z250	2500	18/24	1:21	5	10.5	125
Z350/500	3500/5000	8	1:60	5	10.5	200
Z700/1000	7000/10000	4.5	1:107	5.5	11.2	260

电器控制部分 / Electrical control section

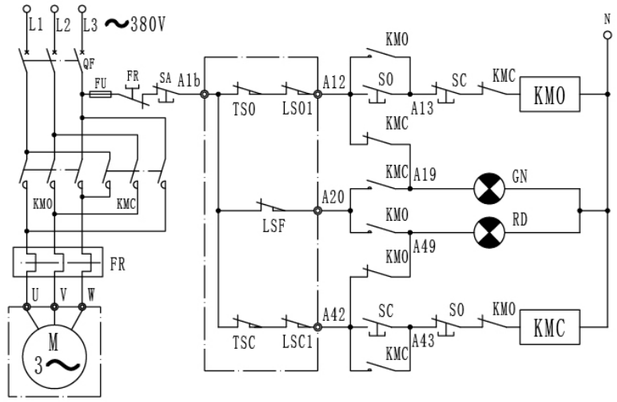

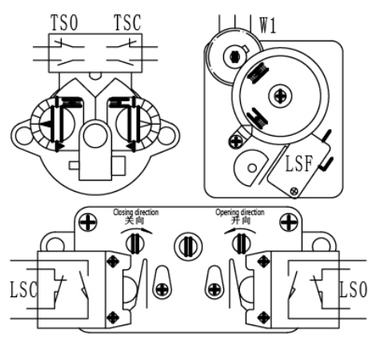

代号 Code name	名称 Name	型号 Model	数量 Number	备注 Remarks	代号 Code name	名称 Name	型号 Model	数量 Number	备注 Remarks
FR	热继电器 Thermal relay		1	用户自备 User self provided	LSF	闪光开关 Flash switch	V-157	1	
KMOKMC	交流接触器 AC contactor	GJ10	1	用户自备 User self provided	W1	电位器 potentiometer	WX14-12	1	
SAS0SC	按钮 Button	LA11-11D	3	用户自备 User self provided	M	电机 Electric machinery	YDF2-W	1	
TSOTSC	转矩开关 Torque switch	DK3-2A	1		TH	热敏开关 Thermosensitive switch		1	特殊订货 Special order
LSOLSC	行程开关 Travel switch	HWK-22A	1		RT	空间加热器 Space heater		1	特殊订货 Special order

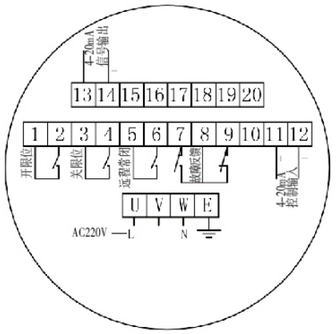

调节型220V端子接线图
Wiring diagram of regulated 220 V terminal

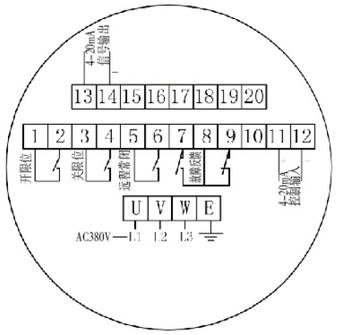

调节型380V端子接线图
Wiring diagram of regulated 380 V terminal

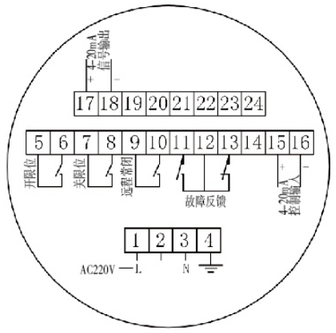

调节防爆型220V端子接线图
Wiring diagram of regulated explosion-proof 220V terminal

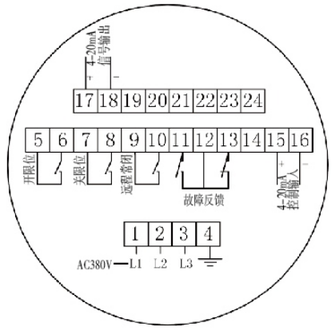

调节防爆型380V端子接线图
Wiring diagram of regulated explosion-proof 380V terminal

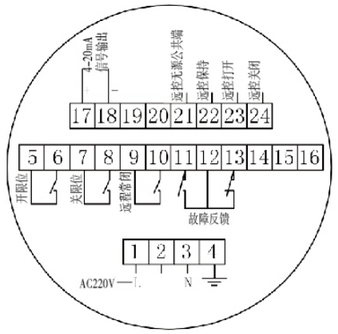

非侵防爆开关型220V端子接线图
Wiring diagram of non-invasive explosion-proof switch type 220V terminal

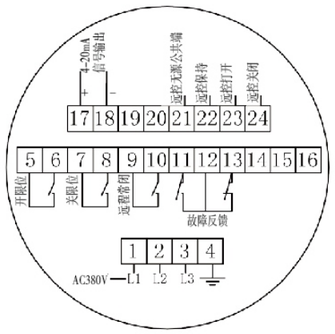

非侵防爆开关型380V端子接线图
Wiring diagram of non-invasive explosion-proof switch type 380V terminal

故障反馈 Fault feedback	开阀 Valve opening	关限位 Limit position	控制输入 Control input
信号输出 Signal output	关阀 Shut off valve	公共线 Common line	
远控打开 Remote control open	开力矩 Open torque	关力矩 Moment of closure	
远程常闭 Remote normal closure	开限位 Opening limit	电位器 Potentiometer	
运行指示 Operation instructions	过力矩故障 Over torque fault	远控关闭 Remote control shutdown	
远控保持 Remote control and maintenance		远控无源公共端 Remote control passive common terminal	

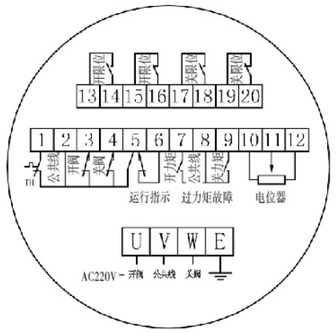

220V普通端子接线图
Wiring diagram of 220V common terminal

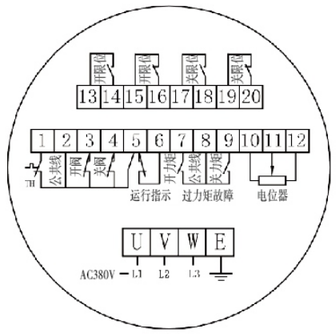

380V普通端子接线图
Wiring diagram of 380V common terminal

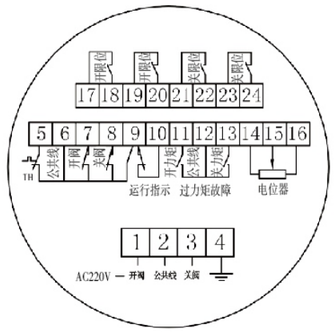

220V防爆端子接线图
Wiring diagram of 220V explosion-proof terminal

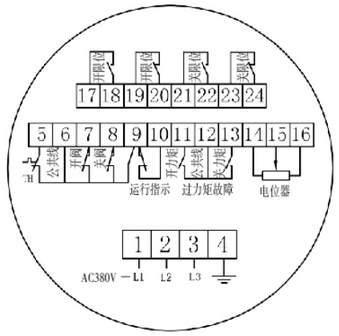

380V防爆端子接线图
Wiring diagram of 380V explosion-proof terminal

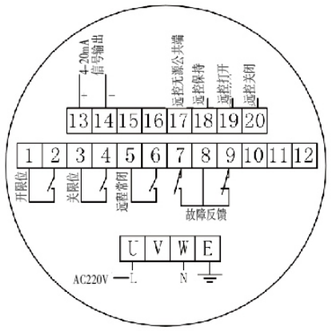

非侵开关型220V端子接线图
Wiring diagram of non invading switch type 220V terminal

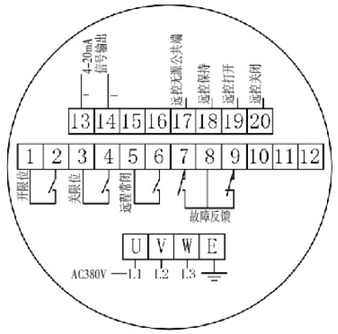

非侵开关型380V端子接线图
Wiring diagram of non invading switch type 380V terminal

故障反馈	Fault feedback	开阀	Valve opening	关限位	Limit position	控制输入	Control input
信号输出	Signal output	关阀	Shut off valve	公共线	Common line		
远控打开	Remote control open	开力矩	Open torque	关力矩	Moment of closure		
远程常闭	Remote normal closure	开限位	Opening limit	电位器	Potentiometer		
运行指示	Operation instructions	过力矩故障	Over torque fault	远控关闭	Remote control shutdown		
远控保持	Remote control and maintenance	远控无源公共端	Remote control passive common terminal				

结构优势与特点Structural advantages and characteristics

1、符合国内外先进标准的要求，密封可靠，性能优良，造型美观。
2、闸板、阀座密封面用铁基合金堆焊或司太立（stellite）钴基硬质合金堆焊而成，耐磨、耐高温、耐腐蚀、抗擦伤性能好、使用寿命长。
3、采用楔式弹性闸板结构，中大口径设置滚动轴承，开关灵活，启闭轻松。
4、阀杆经调质及表面氮化处理，有良好的抗腐蚀性，抗擦伤性和耐磨性。
5、可采用各种配管法兰标准及法兰密封面型式，满足各种工程需要及用户要求。
6、阀体材料品种齐全，填料、垫片可根据实际工况或用户要求合理选配，能适用于各种压力、温度及介质工况。

1、Meets the domestic and foreign advanced standard requirement, the seal is reliable, the performance is fine, handsome appearance.
2、The damper plate, the valve seat packing surface is too vertical (stellite) with the iron-base alloy built-up welding or the department the cobalt base hard alloy built-up welding to become, wear-resisting, thermostable, anti-corrosive, the anti-abrasion performance is good, the service life is long.
3、Using wedge-type flexible gate structure, medium and large caliber set bearings, switches flexible, open and close easily.
4、Stem quenched and the nitrogen treatment, with good corrosion resistance, scratch resistance and wear resistance.
5、Can be used with a variety of standard pipe flanges and flange sealing surface types to meet various project needs and user requirements.
6、Valve body materials, variety, packing, gasket can be based on actual working conditions or the user requests a reasonable option,can be applied to all kinds of pressure, temperature and medium conditions.

标准与规范 Standards and norms

设计与制造 Design and Manufacture	结构长度 Structure Length	压力-温度等级 Pressure-temperature rating	连接法兰 Connection flange	试验与检验 Test and Inspection
GB 12234	GB 12221	GB/T 12224	JB/T 79.1-2-94 GB 9113-2009 HG 20592 ~ 20635	JB/T 9092-1999 GB 13927-2005
ASME B16. 34 API600	ASME B16. 10	ASME B16. 34 API600	ASME B16. 5 ASME B16. 25 ASME B16. 47	ISO5208 API598
JIS B2073 B2083	JIS B2002	JIS B2212 B2214	JIS B2073 B2083	JIS B2003

性能参数 Performance parameter

序号	项目名称	项目名称					
		PN16	PN25	PN40	PN64	PN100	PN160
1	公称压力PN(MPa)	1.6	2.5	4.0	6.4	10	16
2	壳体强度试验压力 Shell strength test pressure(MPa)	常温下公称压力的1.5倍 1.5 Times the nominal pressure at room temperature					
3	高压密封试验压力 High-pressure sealing Test pressure(MPa)	常温下公称压力的1.1倍 1.1Times the nominal pressure at room temperature					
4	常温下工作压力Operating pressure at room temperature(MPa)	按GB/T 12224 压力温度额定值 According to GB/T 12224 pressure temperature rating					

主要零件材料 Main components material

名称 Name	材料 Material								
阀体/阀盖 Body/Bonnet	CF8	CF3	CF8M	CF3M	WCB	LCB	WC6	WC9	C5
闸板 Wedge	CF8	CF3	CF8M	CF3M	WCB	LCB	WC6	WC9	C5
阀杆 Stem	F304	F304L	F316	F316L	2CR13	F304	F304	F304	F304
阀杆螺母 Stem Nut	铝青铜 Aluminium Bronze								
填料 Packing	PTFE/柔性石墨				石墨 Graphite				
垫片 Gasket	PTFE/金属缠绕垫				石墨 Graphite				
压盖 Gland	CF8	CF3	CF8M	CF3M	WCB	LCB	WC6	WC9	C5
螺栓 Bolt	不锈钢 Stainless Steel				35CrMoA				
螺母 Nut	不锈钢 Stainless Steel				45、35CrMoA				

※注：主要零部件及密封圈的材质可根据实际工况条件或用户特殊要求设计选用。
Note: The main spare parts and sealing-ring materials can be designed for options as per real working conditions and users'special requirements.

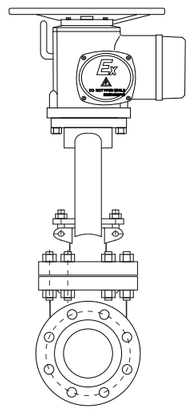

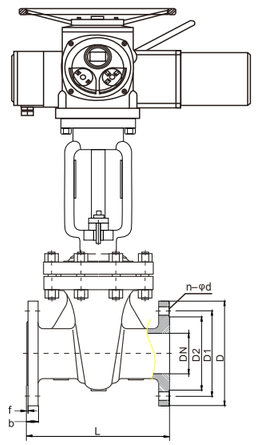

电动闸阀主要外形及连接尺寸(国标) Main Outline and Connecting（GB）

MEDLE		Inch	D	D1	D2	n-d	b	f	L
1. 0	DN15	1/2"	95	65	45	4-14	14	2	130
	DN20	3/4"	105	75	55	4-14	16	2	150
	DN25	1"	115	85	65	4-14	16	2	160
	DN32	1-1/4"	140/135	100	78	4-18	18	2	180
	DN40	1-1/2"	150/145	110	85	4-18	18	2	200
	DN50	2"	165/160	125	100	4-18	20	2	180
	DN65	2-1/2"	185/180	145	120	4-18	20	2	195
	DN80	3"	195	160	135	8-18	20	2	210
	DN100	4"	215	180	155	8-18	22	2	230
	DN125	5"	245	210	185	8-18	22	2	255
	DN150	6"	280	240	210	8-22	24	2	280
	DN200	8"	335	295	265	8-22	24	2	330
	DN250	10"	390	350	320	12-22	26	2	380
	DN300	12"	440	400	368	12-22	26	2	420
	DN350	14"	500	460	42882	16-22	26	2	450
	DN400	16"	565	515	532	16-26	26	2	480
	DN450	18"	615	656	585	20-26	28	2	510
	DN500	20"	670	620	685	20-26	28	2	540
1. 6	DN15	1/2"	95	65	45	4-14	14	2	130
	DN20	3/4"	105	75	55	4-14	14	2	150
	DN25	1"	115	85	65	4-14	14	2	160
	DN32	1-1/4"	140/135	100	75	4-18	16	2	180
	DN40	1-1/2"	150/145	110	85	4-18	16	3	200
	DN50	2"	165/160	125	100	4-18	16	3	250
	DN65	2-1/2"	185/180	145	120	4-18	18	3	265
	DN80	3"	200/195	160	135	8-18	20	3	280
	DN100	4"	220/215	180	155	8-18	20	3	300
	DN125	5"	220/215	210	185	8-18	22	3	325
	DN150	6"	250/245	240	210	8-23	24	3	350
	DN200	8"	285/280	295	265	12-23	26	3	400
	DN250	10"	340/335	355	320	12-25	30	3	450
	DN300	12"	405	410	375	12-25	30	4	00
	DN350	14"	460	470	435	16-30	34	4	550
	DN400	16"	520	525	485	16-30	36	4	600
	DN450	18"	580640	585	545	20-30	40	4	650
	DN500	20"	715/705	650	608	20-34	44	4	700

电动闸阀主要外形及连接尺寸（美标） Main Outline and Connecting (ANSI)

MEDLE		Inch	D	D1	D2	n-d	b	f	L
150 Class	DN15	1/2"	90	60.3	34.9	4-16	11.5	2	108
	DN20	3/4"	100	69.9	42.9	4-16	13	2	117
	DN25	1"	110	79.4	50.8	4-16	14.5	2	127
	DN32	1-1/4"	115	88.9	63.5	4-16	16	2	140
	DN40	1-1/2"	125	98.4	73	4-16	17.5	2	165
	DN50	2"	150	120.7	92.1	4-19	19.5	2	178
	DN65	2-1/2"	180	139.7	104.8	4-19	22.5	2	190
	DN80	3"	190	152.4	127	4-19	24	2	203
	DN100	4"	230	190.5	157.2	8-19	24	2	229
	DN125	5"	255	215.9	185.7	8-22	24	2	356
	DN150	6"	280	241.3	215.9	8-22	25.5	2	394
	DN200	8"	345	298.5	269.9	8-22	29	2	457
	DN250	10"	405	362	323.8	12-25	30.5	2	533
	DN300	12"	485	431.8	381	12-25	32	2	610
	DN350	14"	535	476.3	412.8	12-29	35	2	686
	DN400	16"	595	539.8	469.9	16-29	37	2	762
300 Class	DN15	1/2"	95	66.7	34.9	4-16	14.5	2	140
	DN20	3/4"	115	82.6	42.9	4-19	16	2	152
	DN25	1"	125	88.9	50.8	4-19	17.5	2	165
	DN32	1-1/4"	135	98.4	63.5	4-19	19.5	2	178
	DN40	1-1/2"	155	114.3	73	4-22	21	2	190
	DN50	2"	165	127	92.1	8-19	22.5	2	216
	DN65	2-1/2"	190	149.2	104.8	8-22	25.5	2	241
	DN80	3"	210	168.3	127	8-22	29	2	282
	DN100	4"	255	200	157.2	8-22	32	2	305
	DN125	5"	280	235	185.7	8-22	35	2	381
	DN150	6"	320	269.9	215.9	12-22	37	2	403
	DN200	8"	380	330.2	269.9	12-25	41.5	2	502
	DN250	10"	445	387.4	323.8	16-29	48	2	568
	DN300	12"	520	450.8	381	16-32	51	2	648
	DN350	14"	585	515.4	412.8	20-32	54	2	762
	DN400	16"	650	571.5	469.9	20-35	57.5	2	838
600 Class	DN15	1/2"	95	66.7	34.9	4-16	21	6.4	165
	DN20	3/4"	115	82.6	42.9	4-19	23	6.4	190
	DN25	1"	125	88.9	50.8	4-19	24	6.4	216
	DN32	1-1/4"	135	98.4	63.5	4-19	27.5	6.4	229
	DN40	1-1/2"	155	114.3	73	4-22	29	6.4	241
	DN50	2"	165	127	92.1	8-19	32	6.4	292
	DN65	2-1/2"	190	149.2	104.8	8-22	35	6.4	330
	DN80	3"	210	168.3	127	8-22	38.5	6.4	356
	DN100	4"	275	215.9	157.2	8-25	45	6.4	432
	DN125	5"	330	266.7	185.7	8-29	51.5	6.4	508
	DN150	6"	355	292.1	215.9	12-29	54.5	6.4	559
	DN200	8"	420	349.2	269.9	12-32	62	6.4	660
	DN250	10"	510	431.8	323.8	16-35	70	6.4	787
	DN300	12"	560	489	381	20-35	73.5	6.4	838
	DN350	14"	605	527	412.8	20-39	76.5	6.4	889

*注：
结构长度及连接法兰尺寸可根据用户要求设计制造。根据不同的扭矩、介质，适配的执行器型号及尺寸可能有所不同。
以上执行器配置数据均采集自软密封(F, N, P)阀门，硬密封阀门的配置及数据请咨询本公司。

HK60-Z-Z 多回转电动闸阀（日标）

Multi-Turn Electric Gate Valve(JIS)

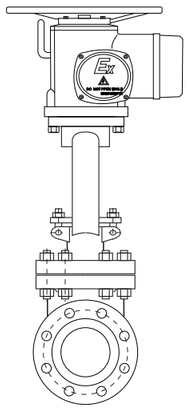

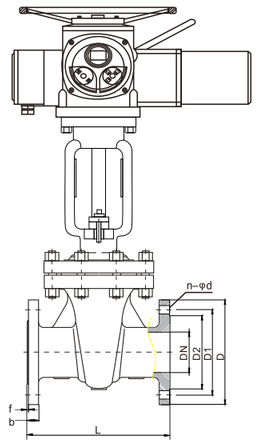

电动闸阀主要外形及连接尺寸(日标) Main Outline and Connecting（JIS）

MEDLE		Inch	D	D1	D2	n-d	b	f	L
10K	DN15	1/2"	95	70	52	4-15	12	1	108
	DN20	3/4"	100	75	58	4-15	14	1	117
	DN25	1"	125	90	70	4-19	14	1	127
	DN32	1-1/4"	135	100	80	4-19	16	2	140
	DN40	1-1/2"	140	105	85	4-19	16	2	165
	DN50	2"	155	120	100	4-19	16	2	178
	DN65	2-1/2"	175	140	120	4-19	18	2	191
	DN80	3"	185	150	130	8-19	18	2	203
	DN100	4"	210	175	155	8-19	18	2	229
	DN125	5"	250	210	185	8-23	20	2	254
	DN150	6"	280	240	215	8-23	22	2	267
	DN200	8"	330	290	265	12-23	22	2	292
	DN250	10"	400	355	325	12-25	24	2	330
	DN300	12"	445	400	370	16-25	24	2	381
	DN350	14"	490	445	415	16-25	26	2	381
	DN400	16"	560	510	475	16-25	28	2	406
20K	DN15	1/2"	95	70	52	4-15	14	1	140
	DN20	3/4"	100	75	58	4-15	16	1	152
	DN25	1"	125	90	70	4-19	16	1	165
	DN32	1-1/4"	135	100	80	4-19	18	2	178
	DN40	1-1/2"	140	105	85	4-19	18	2	190
	DN50	2"	155	120	100	8-19	18	2	216
	DN65	2-1/2"	175	140	120	8-19	20	2	241
	DN80	3"	200	160	135	8-23	22	2	283
	DN100	4"	225	185	160	8-23	24	2	305
	DN125	5"	270	225	195	8-25	26	2	381
	DN150	6"	305	260	230	12-25	28	2	403
	DN200	8"	350	305	275	12-25	30	2	419
	DN250	10"	430	380	345	12-27	34	2	457
	DN300	12"	480	430	395	16-27	35	3	502
	DN350	14"	540	480	440	16-33	40	3	762
	DN400	16"	605	540	495	16-33	46	3	838

*注：
结构长度及连接法兰尺寸可根据用户要求设计制造。根据不同的扭矩、介质，适配的执行器型号及尺寸可能有所不同。
以上执行器配置数据均采集自软密封(F, N, P)阀门，硬密封阀门的配置及数据请咨询本公司。

HK60-Z-J 多回转电动截止阀

Multi-Turn Electric Globe Valve

结构优势与特点Structural advantages and characteristics

1、产品设计制造按国家标准,结构合理，密封可靠，性能优良，造型美观。
2、阀瓣、阀座密封面用铁基合金堆焊或司太立（stellite）钴基硬质合金堆焊而成，耐磨、耐高温、耐腐蚀、抗擦伤性能好、使用寿命长。
3、阀杆经调质及表面氮化处理，有良好的抗腐蚀性和抗擦伤性。
4、可采用各种配管法兰标准及法兰密封面型式，满足各种工程需要和用户要求。
5、阀体材料品种齐全，填料、垫片可根据实际工况或用户要求合理选配，能适用与各种压力、温度及介质工况。
6、倒密封采用螺纹连接密封座或本体堆焊不锈钢而成，密封可靠，填料更换可在不停机情况下进行方便快捷不影响系统运行。

1、The product designed and manufactured according to national standard, reasonable structure, reliable sealing, excellent performance and beautiful shape.
2、Flap valve, the valve seat sealing surface of iron based alloy or stellite (stellite) made of cobalt-based alloy welding, wear-resistant, high temperature, corrosion, anti-abrasion performance, long life .
3、Stem quenched and the nitrogen treatment, with good resistance to corrosion and scratch resistance.
4、Can be used with a variety of standard pipe flanges and flange sealing surface types to meet various project needs and user requirements.
5、Body material variety, packing, gasket can be based on actual working conditions or the user requests a reasonable option, can be applied with all kinds of pressure, temperature and medium conditions.
6、Sealed with screw connection seal back seat or body made of stainless steel welding, sealing and reliable replacement of filling in non-stop convenient and efficient manner does not affect system operation.

标准与规范Standards and norms

设计与制造 Design and Manufacture	结构长度 Structure Length	压力、温度等级 Pressure、temperature rating	连接法兰 Connecting flange	检验与试验 Test and Inspection
GB 12235	GB 12221	GB 12224	JB/T 79/82~1994 GB 9113 HG 20592-20635	JB/T 9092-1999 GB 13927
ANSI B16.34 BS1873	ANSI B16.10	ANSI B16.34	ANSI B16.5	API 598
JIS B2071 B2081	JIS B2002	JIS B2212 B2214	JIS B2071 B2081	JIS B2003

主要零件材料Main components material

名称 Name	材料 Material								
阀体/阀盖 Body/Bonnet	CF8	CF3	CF8M	CF3M	WCB	LCB	WC6	WC9	C5
阀瓣 Wedge	CF8	CF3	CF8M	CF3M	WCB	LCB	WC6	WC9	C5
阀杆 Stem	F304	F304L	F316	F316L	2CR13	F304	F304	F304	F304
阀杆螺母 Stem Nut	铝青铜 Aluminium Bronze								
填料 Packing	PTFE/柔性石墨				石墨 Graphite				
垫片 Gasket	PTFE/金属缠绕垫				石墨 Graphite				
压盖 Gland	CF8	CF3	CF8M	CF3M	WCB	LCB	WC6	WC9	C5
螺栓 Bolt	不锈钢 Stainless Steel				35CrMoA				
螺母 Nut	不锈钢 Stainless Steel				45、35CrMoA				
轮 Handwheel	Stainless Steel								

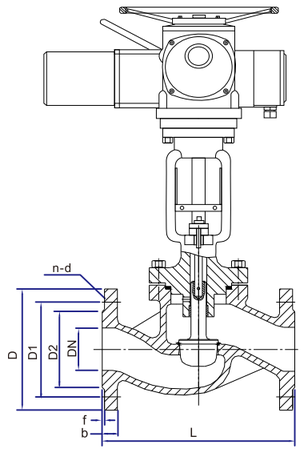

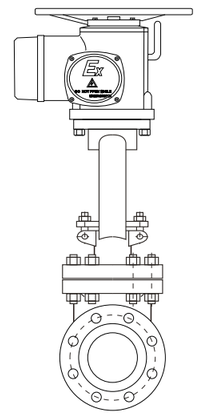

电动截止阀主要外形及连接尺寸(国标) Main Outline and Connecting（GB）

MEDLE		Inch	D	D1	D2	n-d	b	f	L
1.0	DN15	1/2"	95	65	45	4-14	14	2	130
	DN20	3/4"	105	75	55	4-14	16	2	150
	DN25	1"	115	85	65	4-14	16	2	160
	DN32	1-1/4"	140/135	100	78	4-18	18	2	180
	DN40	1-1/2"	150/145	110	85	4-18	18	2	165
	DN50	2"	165/160	125	100	4-18	20	2	180
	DN65	2-1/2"	185/180	145	120	4-18	20	2	195
	DN80	3"	195	160	135	8-18	20	2	210
	DN100	4"	215	180	155	8-18	22	2	230
	DN125	5"	245	210	185	8-18	22	2	255
	DN150	6"	280	240	210	8-22	24	2	280
	DN200	8"	335	295	265	8-22	24	2	330
	DN250	10"	390	350	320	12-22	26	2	380
	DN300	12"	440	400	368	12-22	26	2	420
	DN350	14"	500	460	428	16-22	26	2	450
	DN400	16"	565	515	482	16-26	26	2	480
	DN450	18"	615	656	532	20-26	28	2	510
	DN500	20"	670	620	585	20-26	28	2	540
1.6	DN15	1/2"	95	65	45	4-14	14	2	130
	DN20	3/4"	105	75	55	4-14	14	2	150
	DN25	1"	115	85	65	4-14	14	2	160
	DN32	1-1/4"	140/135	100	75	4-18	16	2	180
	DN40	1-1/2"	150/145	110	85	4-18	16	2	200
	DN50	2"	165/160	125	100	4-18	16	3	230
	DN65	2-1/2"	185/180	145	120	4-18	18	3	290
	DN80	3"	200/195	160	135	8-18	20	3	310
	DN100	4"	220/215	180	155	8-18	20	3	350
	DN125	5"	220/215	210	185	8-18	22	3	400
	DN150	6"	250/245	240	210	8-23	24	3	480
	DN200	8"	285/280	295	265	12-23	26	3	500
	DN250	10"	340/335	355	320	12-25	30	3	550
	DN300	12"	405	410	375	12-25	30	3	750
	DN350	14"	460	470	435	16-30	34	4	850
	DN400	16"	520	525	485	16-30	36	4	950
	DN450	18"	580640	585	545	20-30	40	4	1050
	DN500	20"	715/705	650	608	20-34	44	4	1150

电动截止阀主要外形及连接尺寸（美标） Main Outline and Connecting (ANSI)

MEDLE		Inch	D	D1	D2	n-d	b	f	L
150 Class	DN15	1/2"	90	60.3	34.9	4-16	11.5	2	108
	DN20	3/4"	100	69.9	42.9	4-16	13	2	117
	DN25	1"	110	79.4	50.8	4-16	14.5	2	127
	DN32	1-1/4"	115	88.9	63.5	4-16	16	2	140
	DN40	1-1/2"	125	98.4	73	4-16	17.5	2	165
	DN50	2"	150	120.7	92.1	4-19	19.5	2	203
	DN65	2-1/2"	180	139.7	104.8	4-19	22.5	2	216
	DN80	3"	190	152.4	127	4-19	24	2	241
	DN100	4"	230	190.5	157.2	8-19	24	2	292
	DN125	5"	255	215.9	185.7	8-22	24	2	356
	DN150	6"	280	241.3	215.9	8-22	25.5	2	406
	DN200	8"	345	298.5	269.9	8-22	29	2	495
	DN250	10"	405	362	323.8	12-25	30.5	2	622
	DN300	12"	485	431.8	381	12-25	32	2	298
	DN350	14"	535	476.3	412.8	12-29	35	2	787
	DN400	16"	595	539.8	469.9	16-29	37	2	914
300 Class	DN15	1/2"	95	66.7	34.9	4-16	14.5	2	152
	DN20	3/4"	115	82.6	42.9	4-19	16	2	178
	DN25	1"	125	88.9	50.8	4-19	17.5	2	203
	DN32	1-1/4"	135	98.4	63.5	4-19	19.5	2	216
	DN40	1-1/2"	155	114.3	73	4-22	21	2	229
	DN50	2"	165	127	92.1	8-19	22.5	2	267
	DN65	2-1/2"	190	149.2	104.8	8-22	25.5	2	292
	DN80	3"	210	168.3	127	8-22	29	2	318
	DN100	4"	255	200	157.2	8-22	32	2	356
	DN125	5"	280	235	185.7	8-22	35	2	400
	DN150	6"	320	269.9	215.9	12-22	37	2	445
	DN200	8"	380	330.2	269.9	12-25	41.5	2	559
	DN250	10"	445	387.4	323.8	16-29	48	2	622
	DN300	12"	520	450.8	381	16-32	51	2	711
	DN350	14"	585	515.4	412.8	20-32	54	2	
	DN400	16"	650	571.5	469.9	20-35	57.5	2	
600 Class	DN15	1/2"	95	66.7	34.9	4-16	21	6.4	165
	DN20	3/4"	115	82.6	42.9	4-19	23	6.4	190
	DN25	1"	125	88.9	50.8	4-19	24	6.4	216
	DN32	1-1/4"	135	98.4	63.5	4-19	27.5	6.4	229
	DN40	1-1/2"	155	114.3	73	4-22	29	6.4	241
	DN50	2"	165	127	92.1	8-19	32	6.4	292
	DN65	2-1/2"	190	149.2	104.8	8-22	35	6.4	330
	DN80	3"	210	168.3	127	8-22	38.5	6.4	356
	DN100	4"	275	215.9	157.2	8-25	45	6.4	432
	DN125	5"	330	266.7	185.7	8-29	51.5	6.4	508
	DN150	6"	355	292.1	215.9	12-29	54.5	6.4	559
	DN200	8"	420	349.2	269.9	12-32	62	6.4	660
	DN250	10"	510	431.8	323.8	16-35	70	6.4	787
	DN300	12"	560	489	381	20-35	73.5	6.4	838
	DN350	14"	605	527	412.8	20-39	76.5	6.4	889

*注：
结构长度及连接法兰尺寸可根据用户要求设计制造。根据不同的扭矩、介质，适配的执行器型号及尺寸可能有所不同。
以上执行器配置数据均采集自软密封(F, N, P)阀门，硬密封阀门的配置及数据请咨询本公司。

HK60-Z-J 多回转电动截止阀（日标）

Multi-Turn Electric Globe Valve(JIS)

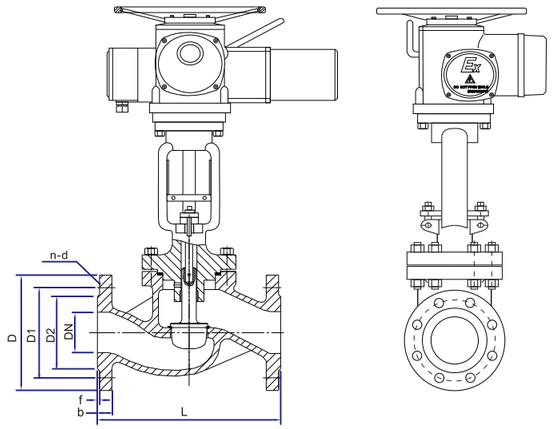

电动闸阀主要外形及连接尺寸(日标) Main Outline and Connecting（JIS）

MEDLE		Inch	D	D1	D2	n-d	b	f	L
10K	DN15	1/2"	95	70	52	4-15	12	1	108
	DN20	3/4"	100	75	58	4-15	14	1	117
	DN25	1"	125	90	70	4-19	14	1	127
	DN32	1-1/4"	135	100	80	4-19	16	2	140
	DN40	1-1/2"	140	105	85	4-19	16	2	165
	DN50	2"	155	120	100	4-19	16	2	178
	DN65	2-1/2"	175	140	120	4-19	18	2	191
	DN80	3"	185	150	130	8-19	18	2	203
	DN100	4"	210	175	155	8-19	18	2	229
	DN125	5"	250	210	185	8-23	20	2	254
	DN150	6"	280	240	215	8-23	22	2	267
	DN200	8"	330	290	265	12-23	22	2	292
	DN250	10"	400	355	325	12-25	24	2	330
	DN300	12"	445	400	370	16-25	24	2	381
	DN350	14"	490	445	415	16-25	26	2	381
	DN400	16"	560	510	475	16-25	28	2	406
20K	DN15	1/2"	95	70	52	4-15	14	1	140
	DN20	3/4"	100	75	58	4-15	16	1	152
	DN25	1"	125	90	70	4-19	16	1	165
	DN32	1-1/4"	135	100	80	4-19	18	2	178
	DN40	1-1/2"	140	105	85	4-19	18	2	190
	DN50	2"	155	120	100	8-19	18	2	216
	DN65	2-1/2"	175	140	120	8-19	20	2	241
	DN80	3"	200	160	135	8-23	22	2	283
	DN100	4"	225	185	160	8-23	24	2	305
	DN125	5"	270	225	195	8-25	26	2	381
	DN150	6"	305	260	230	12-25	28	2	403
	DN200	8"	350	305	275	12-25	30	2	419
	DN250	10"	430	380	345	12-27	34	2	457
	DN300	12"	480	430	395	16-27	35	3	502
	DN350	14"	540	480	440	16-33	40	3	762
	DN400	16"	605	540	495	16-33	46	3	838

*注：
结构长度及连接法兰尺寸可根据用户要求设计制造。根据不同的扭矩、介质，适配的执行器型号及尺寸可能有所不同。
以上执行器配置数据均采集自软密封(F, N, P)阀门，硬密封阀门的配置及数据请咨询本公司。

HK60-Q-Z-S 多回转电动法兰球阀

Multi-Turn Electric Flange Ball Valve

法兰球阀是近年来被广泛采用的一种新型阀门，它具有以下优点：

1. 流体阻力小，其阻力系数与同长度的管段相等。
2. 结构简单、体积小、重量轻。
3. 紧密可靠，目前球阀的密封面材料广泛使用塑料、密封性好，在真空系统中也已广泛使用。
4. 操作方便，开闭迅速，从全开到全关只要旋转90°，便于远距离的控制。
5. 维修方便，球阀结构简单，密封圈一般都是活动的，拆卸更换都比较方便。
6. 在全开或全闭时，球体和阀座的密封面与介质隔离，介质通过时，不会引起阀门密封面的侵蚀。
7. 适用范围广，通径从小到几毫米，大到几米，从高真空至高压力都可应用。

Flanged ball valve is a new type of valve that has been widely used in recent years. It has the following advantages:

1. The fluid resistance is small, and its resistance coefficient is equal to that of a pipe section of the same length.
2. Simple structure, small size and light weight.
3. It is tight and reliable. At present, the sealing surface material of the ball valve is widely used in plastics with good sealing performance, and it has also been widely used in the vacuum system.
4. It is easy to operate and open and close quickly. It only needs to rotate 90° from fully open to fully closed, which is convenient for remote control.
5. The maintenance is convenient, the structure of the ball valve is simple, the sealing ring is generally movable, and it is convenient to disassemble and replace.6. When fully open or fully closed, the sealing surface of the ball and the valve seat is isolated from the medium, and the medium will not cause erosion of the valve sealing surface when the medium passes.7. It has a wide range of applications, with a diameter ranging from a few millimeters to a few meters, and can be applied from high vacuum to high pressure.

标准与规范 Standards and norms

设计与制造 Design and Manufacture	结构长度 Structure Length	压力、温度等级 Pressure、temperature rating	连接法兰 Connecting flange	检验与试验 Test and Inspection
GB 12235	GB 12221	GB 12224	JB/T 79/82~1994 GB 9113 HG 20592-20635	JB/T 9092-1999 GB 13927
ANSI B16.34 BS1873	ANSI B16.10	ANSI B16.34	ANSI B16.5	API 598
JIS B2071 B2081	JIS B2002	JIS B2212 B2214	JIS B2071 B2081	JIS B2003

主要零件材料 Main components material

名称 Name	材料 Material								
阀体/阀盖 Body/Bonnet	CF8	CF3	CF8M	CF3M	WCB	LCB	WC6	WC9	C5
阀瓣 Wedge	CF8	CF3	CF8M	CF3M	WCB	LCB	WC6	WC9	C5
阀杆 Stem	F304	F304L	F316	F316L	2CR13	F304	F304	F304	F304
阀杆螺母 Stem Nut	铝青铜 Aluminium Bronze								
填料 Packing	PTFE/柔性石墨				石墨 Graphite				
垫片 Gasket	PTFE/金属缠绕垫				石墨 Graphite				
压盖 Gland	CF8	CF3	CF8M	CF3M	WCB	LCB	WC6	WC9	C5
螺栓 Bolt	不锈钢 Stainless Steel				35CrMoA				
螺母 Nut	不锈钢 Stainless Steel				45、35CrMoA				
轮 Handwheel	不锈钢 Stainless Steel			铸钢 Cast Steel					

浮动式法兰球阀
Floating type flange ball valve

固定式法兰球阀
Trunnion type flange ball valve

锻件法兰球阀
Trunnion forged flange ball valve

执行器参数 Actuator Technical Parameters

普通开关型 ON-OFF Type	反馈信号：有源触点/无源触点（干触点）信号/ 电阻信号 Feedback: the Active Contact Signal, Passive Contact Signal, Resistance
普通调节型 Regulation type	输入/输出信号 4-20mA/0-10 V/1-5 V Input & Output Signal: DC 4-20mA, DC 0-10V, DC 1-5V
智能开关型 Intelligent ON/OFF Switch	带现场/远程控制开关型以及 MODBUS, PROFIBUS 现场总线 The Local, Remote Control ON/OFF Type and MODBUS, PROFIBUS Field Bus
智能调节型 Intelligent Regulation Type	带现场/远程控制调节型以及 MODBUS, PROFIBUS 现场总线 The Local, Remote Control Regulation Type and MODBUS, PROFIBUS Field Bus
电压 Optional Voltage	AC380V AC220V, 特殊电压可定制 AC380V AC220V, Special Voltage Can be Customized

产品参数 Technical Parameters

公称通径 Nominal Size	DN15~DN1000
连接类型 Connection Type	法兰 Flange
压力等级 Pressure Rating	1.6~6.3MPa , CLASS 150/300/600/900, 10K/20K
环境温度 Ambient temperature	-30°C~70°C
工作温度 Operating temperature	PTFE：-20°C~180°C PPL: -20°C~250°C Hard seal：-30°C~425°C
结构类型 Structure type	浮动球芯直动式，固定式球芯直动式； Floating ball core Trunnion ball core
安装方位 Installation position	360° 任意角度安装 Installation at any angle
适用介质 Applicable Medium	水,液体,气体,油,粉,蒸汽,酸碱腐蚀性介质。 Water, Liquids, Gas, Oil, Powder, Steam, Acid-base Corrosive Medium.

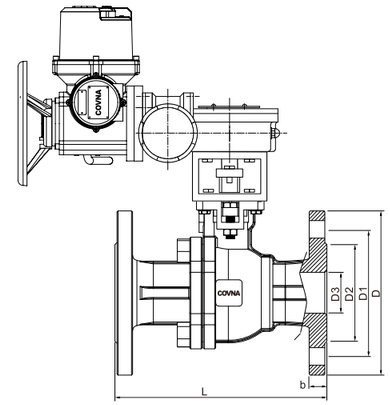

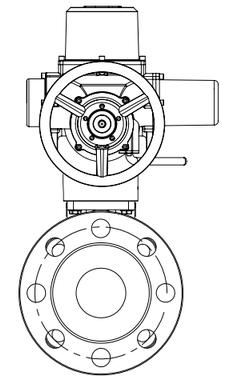

主要外形及连接法兰尺寸
Main Outline and Connecting Flange Size

MEDLE		inch	L	D3	D2	D1	D	b	n-φd
1.6MPa	DN200	8"	457	200	265	295	335	24	12-23
	DN250	10"	533	250	320	355	405	26	12-25
	DN300	12"	610	300	375	410	460	28	12-25
	DN350	14"	686	350	435	470	520	32	16-25
	DN400	16"	762	400	485	525	580	36	16-30
	DN460	18"	864	450	454	585	640	38	20-30
	DN500	20"	914	500	608	650	705	40	20-34
CLASS 150	DN200	8"	457	200	270	298.5	343	27	8-22.5
	DN250	10"	533	250	324	362	406	28.6	12-25.5
	DN300	12"	610	300	381	431.8	483	30.2	12-25.5
	DN350	14"	686	350	413	476.3	533	33.4	12-28.5
	DN400	16"	762	400	470	539.8	597	35	16-28.5
	DN460	18"	864	450	533	577.9	635	38.1	16-32
	DN500	20"	914	500	584	635	699	41.3	20-32
CLASS 300	DN200	8"	502	200	270	330.2	381	39.7	12-25.5
	DN250	10"	568	250	324	387.4	445	46.1	16-28.5
	DN300	12"	648	300	381	450.8	521	49.3	16-32
	DN350	14"	762	350	413	514.4	584	52.4	20-32
	DN400	16"	838	400	470	571.5	648	55.6	20-35
	DN460	18"	914	450	533	628.5	711	58.8	24-35
	DN500	20"	991	500	584	685.8	775	62	24-35

*注：系列球阀结构长度及连接法兰尺寸可根据用户要求设计制造。
根据不同的扭矩、介质，适配的执行器型号及尺寸可能有所不同。
以上执行器配置数据均采集自软密封(F, N, P)阀门，硬密封阀门的配置及数据请咨询本公司。

Note: The structural length and connecting flange size of ball valve series can be made to order.
The actuator model vary with different output torque and medium.
Above data are all on basis of soft-sealed valves(F, N, P), contact COVNA for hard-sealed valves data.

执行器参数 Actuator Technical Parameters

普通开关型 ON-OFF Type	反馈信号：有源触点/无源触点（干触点）信号/ 电阻信号 Feedback: the Active Contact Signal, Passive Contact Signal, Resistance
普通调节型 Regulation type	输入/输出信号 4-20mA/0-10 V/1-5 V Input & Output Signal: DC 4-20mA, DC 0-10V, DC 1-5V
智能开关型 Intelligent ON/OFF Switch	带现场/远程控制开关型以及 MODBUS, PROFIBUS 现场总线 The Local, Remote Control ON/OFF Type and MODBUS, PROFIBUS Field Bus
智能调节型 Intelligent Regulation Type	带现场/远程控制调节型以及 MODBUS, PROFIBUS 现场总线 The Local, Remote Control Regulation Type and MODBUS, PROFIBUS Field Bus
电压 Optional Voltage	AC380V AC220V, 特殊电压可定制 AC380V AC220V, Special Voltage Can be Customized

产品参数 Technical Parameters

公称通径 Nominal Size	DN50~DN1000
阀体材质 Body Material	铸铁、碳钢(WCB)、不锈钢(CF8、CF8M) Cast Iron, Carbon Steel(WCB), Stainless Steel(CF8, CF8M)
连接类型 Connection Type	对夹,法兰 Wafer, Flanged Type
压力等级 Pressure Rating	PN1.0-PN1.6 MPa
结构类型 Structure type	中线结构 Median line
阀座密封 Seat Material	EPDM: -10℃ ~120℃ PTFE: -30℃ ~180℃
阀板材质 Disc Material	铸铁、不锈钢(CF8、CF8M) Cast Iron, Stainless Steel(CF8, CF8M)
阀杆材质 Stem Material	Stainless Steel (CF8, CF8M)
安装方位 Installation position	360° 任意角度安装 Installation at any angle
适用介质 Applicable Medium	水,液体,气体,油,粉,蒸汽,酸碱腐蚀性介质。 Water, Liquids, Gas, Oil, Powder, Steam, Acid-base Corrosive Medium.

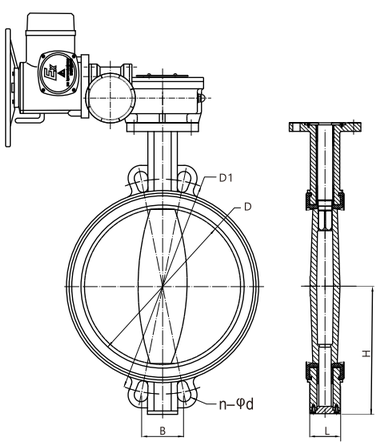

主要外形及连接尺寸 Main Outline and Connecting (1.0Mpa)

MEDLE	DN400	DN450	DN500	DN600	DN700	DN800	DN900	DN1000	DN1200
Inch	16"	18"	20"	24"	28"	32"	36"	40"	48"
D	389.6	440.51	491.6	595.5	695	797.7	970	970	1160
D1	515 525	565 585	620 650	725 770	840	950	1050	1160	1380
n-φ d	4-ϕ26 4-ϕ30	4-ϕ26 4-ϕ30	4-ϕ26 4-ϕ33	4-ϕ30 4-ϕ36	4-ϕ30	4-ϕ33	4-ϕ36	4-ϕ36	4-ϕ39
B	100.47 102.42	88.39 91.51	86.99 101.68	113.42 120.46	109.65	124	117.57	129.89	101.5
L	88/102	107/114	127	154	165	190	203	216	276
H	325	345	378	475	535	606	670	735	878

执行器参数 Actuator Technical Parameters

普通开关型 ON-OFF Type	反馈信号：有源触点/无源触点（干触点）信号/ 电阻信号 Feedback: the Active Contact Signal, Passive Contact Signal, Resistance
普通调节型 Regulation type	输入/输出信号 4-20mA/0-10 V/1-5 V Input & Output Signal: DC 4-20mA, DC 0-10V, DC 1-5V
智能开关型 Intelligent ON/OFF Switch	带现场/远程控制开关型以及 MODBUS, PROFIBUS 现场总线 The Local, Remote Control ON/OFF Type and MODBUS, PROFIBUS Field Bus
智能调节型 Intelligent Regulation Type	带现场/远程控制调节型以及 MODBUS, PROFIBUS 现场总线 The Local, Remote Control Regulation Type and MODBUS, PROFIBUS Field Bus
电压 Optional Voltage	AC380V AC220V, 特殊电压可定制 AC380V AC220V, Special Voltage Can be Customized

产品参数 Technical Parameters

公称通径 Nominal Size	DN50~DN1000
阀体材质 Body Material	铸铁、碳钢(WCB)、不锈钢(CF8、CF8M) Cast Iron, Carbon Steel(WCB), Stainless Steel(CF8, CF8M)
连接类型 Connection Type	法兰 Flanged Type
压力等级 Pressure Rating	PN1.0-PN1.6 MPa
结构类型 Structure type	中线结构 Median line
阀座密封 Seat Material	EPDM: -10℃ ~120℃ PTFE: -30℃ ~180℃
阀板材质 Disc Material	铸铁、不锈钢(CF8、CF8M) Cast Iron, Stainless Steel(CF8, CF8M)
阀杆材质 Stem Material	Stainless Steel (CF8, CF8M)
安装方位 Installation position	任意角度 Any
适用介质 Applicable Medium	水,液体,气体,油,粉,蒸汽,酸碱腐蚀性介质。 Water, Liquids, Gas, Oil, Powder, Steam, Acid-base Corrosive Medium.

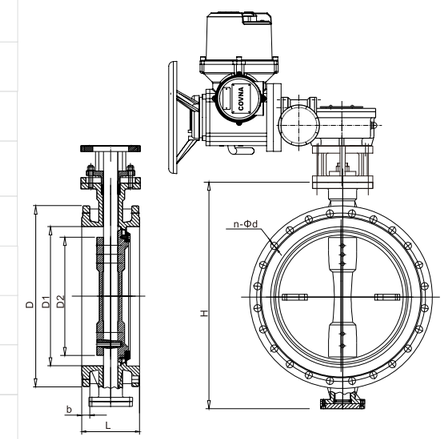

主要外形及连接尺寸 Main Outline and Connecting (1.0Mpa)

MEDLE	DN400	DN450	DN500	DN600	DN700	DN800	DN900	DN1000	DN1200	DN1400	DN1500	DN1600
Inch	2"	2-1/2"	3"	4"	5"	6"	8"	10"	12"	14"	16"	20"
D	565	615	670	780	895	1015	1115	1230	1456	1675	1785	1915
D1	515	565	620	725	840	950	1050	1160	1380	1590	1700	1820
D2	480	530	582	682	794	901	1001	1112	1328	1530	1630	1700
b	24.5	25.5	26.5	30	32.5	35	37.5	40	45	46	47.5	49
L	221	227	234	272	299	325	337	417	478	538	580	229
H	640	715	785	910	1038	1149	1249	1392	1716	1959	2015	2195
n-φd	16-28	20-28	20-28	20-31	24-31	34-34	25-34	23-37	32-40	36-44	40-50	44-50

HK60-Z-D多回转电动法兰刀闸阀

Multi-Turn Electric Knife Gate Valve

执行器参数 Actuator Technical Parameters

普通开关型 ON-OFF Type	反馈信号：有源触点/无源触点（干触点）信号/ 电阻信号 Feedback: the Active Contact Signal, Passive Contact Signal, Resistance
普通调节型 Regulation type	输入/输出信号 4-20mA/0-10 V/1-5 V Input & Output Signal: DC 4-20mA, DC 0-10V, DC 1-5V
智能开关型 Intelligent ON/OFF Switch	带现场/远程控制开关型以及 MODBUS, PROFIBUS 现场总线 The Local, Remote Control ON/OFF Type and MODBUS, PROFIBUS Field Bus
智能调节型 Intelligent Regulation Type	带现场/远程控制调节型以及 MODBUS, PROFIBUS 现场总线 The Local, Remote Control Regulation Type and MODBUS, PROFIBUS Field Bus
电压 Optional Voltage	AC380V AC220V, 特殊电压可定制 AC380V AC220V, Special Voltage Can be Customized

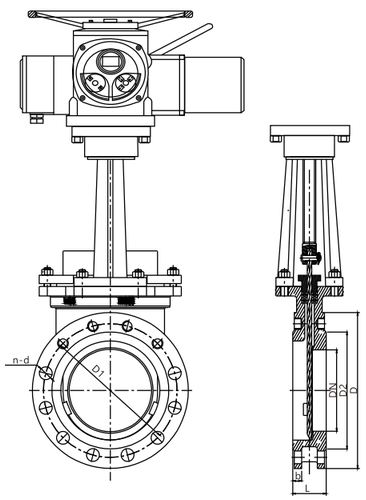

产品参数 Technical Parameters

公称通径 Nominal Size	DN50~DN1000
阀体材质 Body Material	铸铁、碳钢(WCB)、不锈钢(CF8、CF8M) Cast Iron, Carbon Steel(WCB), Stainless Steel(CF8, CF8M)
连接类型 Connection Type	法兰 Flanged Type
压力等级 Pressure Rating	PN1.0
结构类型 Structure type	中线结构 Median line
工作温度 Operating temperature	-30℃ ~300℃
阀板材质 Disc Material	WCB、铸铁、不锈钢(CF8、CF8M) WCB 、Cast Iron, Stainless Steel(CF8, CF8M)
阀杆材质 Stem Material	Stainless Steel (CF8, CF8M)
安装方位 Installation position	任意角度 Any
适用介质 Applicable Medium	泥浆、物料、粘稠、颗粒类流体 Mud, material, viscous, granular fluid

主要外形及连接尺寸(1.0MPa) Main Outline and Connecting (1.0MPa)

Size	2"	2-1/2″	3"	4"	5"	6"	8"	10″	12″	14"	16"	18"	20"
DN	50	65	80	100	125	150	200	250	300	350	400	450	500
D	160	180	195	215	245	280	335	390	440	500	565	615	670
D1	125	145	160	180	210	240	295	350	400	460	515	565	620
D2	100	120	135	155	185	210	265	320	368	428	482	532	585
N-d	4-16	4-16	8-16	8-16	8-16	8-20	8-20	12-20	12-20	16-20	16-24	20-24	20-24
b	18	18	18	18	18	23	23	23	23	23	27	27	27
L	50	50	50	50	50	60	60	70	80	90	100	110	114

精小型电动阀

Mini Motorized Valve

HK62-S 精小型电动不锈钢二通球阀
Mini Motorized 2-Way Stainless Steel Ball Valve

HK62-H 精小型电动黄铜二通球阀
Mini Motorized 2-Way Brass Ball Valve

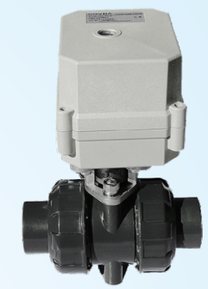

HK62-PY 精小型电动UPVC球阀
Mini Motorized UPVC Ball Valve

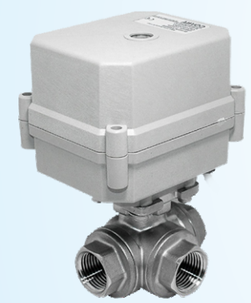

HK63-ST 精小型电动不锈钢三通球阀
Mini Motorized 3-Way Stainless Steel Ball Valve

HK63-HT 精小型电动黄铜三通球阀
Mini Motorized 3-Way Brass Ball Valve

HK62-S-W 精小型电动卫生级二通球阀
Mini Motorized 2-Way Sanitary Ball Valve

HK65-S 精小型电动不锈钢球阀（时间控制）
Mini Motorized Stainless Steel Ball Valve（Time Control）

HK65-H 精小型电动黄铜二通球阀（时间控制）
Mini Motorized 2-Way Brass Ball Valve(Time Control)

HK62-3PCS 精小型电动三片式球阀
Mini Motorized 3-PCS Ball Valve

HK62-S 精小型电动不锈钢二通球阀

Mini Motorized 2-Way Stainless Steel Ball Valve

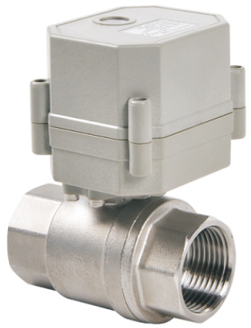

产品参数 Technical Parameters

产品规格	Product Specifications	DN08~DN50
最大工作压力	Max. Working Pressure	1.0MPa
流通介质	Circulation Medium	Water, Air
额定电压	Rated Voltage	AC/DC 110-230V, DC9-24V (Optional)
开关的时间	Open/Close Time	≤7S, ≤10S, ≤12S
寿命	Life Time	70,000 Times
阀体材料	Valve Material	SS304, SS316 (Optional)
执行器材料	Actuator Material	Engineering Plastics
执行器扭矩	Torque Output	2.0N.M, 10.0N.M, 15N.M
环境温度	Ambient Temperature	-15°C-50°C
液体温度	Liquid Temperature	2°C-90°C
线长	Cable length	0. 5m, 1.5m (Optional)
手动方式	Manual Override	YES or NO (Optional)
阀开关指示窗	Indicator	YES or NO (Optional)
旋转角度	Actuator rotation	90°
密封件	Sealing Material	FKM & PTFE
防护等级	Protection Class	IP67

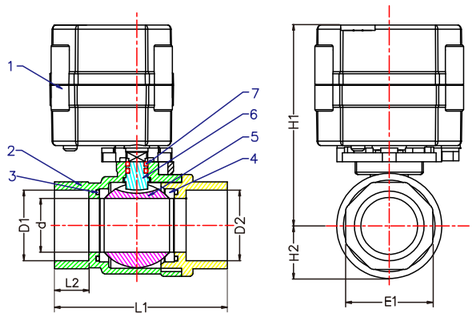

主要零件材质表 Main Parts Materials

NO.	名称 Nane	材质 material
1	执行器 Actuator	PPO A20/A100
2	阀体 Body Cover	STAINLESS STEEL 304
3	O型圈 O-Ring	FKM
4	密封件 Sealing	PTFE
5	球体 Ball	STAINLESS STEEL 304
6	阀杆 Stem	STAINLESS STEEL 304
7	O型圈 O-Ring	FKM

外形尺寸图 Outline Size Dimension

Size	D1/D2	d	L1	L2	E1	H1	H2
DN08	1/4"	10	51	12	21	82	14
DN10	3/8"	10	51	12	21	82	14
DN15	1/2"	15	63	14	25	83	17
DN20	3/4"	20	72	17	31	87	20
DN25	1"	25	81	18	38	95	24
DN32	1-1/4"	32	102	23	47	122	31
DN40	1-1/2"	40	115	25	52	130	36
DN50	2"	50	130	25	66	138	45

HK62-H 精小型电动黄铜二通球阀

Mini Motorized 2-Way Brass Ball Valve

产品参数 Technical Parameters

产品规格	Product Specifications	DN08~DN32
最大工作压力	Max. Working Pressure	1.0MPa
流通介质	Circulation Medium	Water, Air
额定电压	Rated Voltage	AC/DC 110-230V, DC9-24V (Optional)
开关的时间	Open/Close Time	≤7S, ≤10S, ≤12S
寿命	Life Time	70,000 Times
阀体材料	Valve Material	Brass, Nickel Plated Brass
执行器材料	Actuator Material	Engineering Plastics
执行器扭矩	Torque Output	2.0N.M, 10.0N.M, 15N.M
环境温度	Ambient Temperature	-15°C-50°C
液体温度	Liquid Temperature	2°C-90°C
线长	Cable length	0. 5m, 1.5m (Optional)
手动方式	Manual Override	YES or NO (Optional)
阀开关指示窗	Indicator	YES or NO (Optional)
旋转角度	Actuator rotation	90°
密封件	Sealing Material	FKM & PTFE
防护等级	Protection Class	IP67

主要零件材质表 Main Parts Materials

NO.	名称 Nane	材质 material
1	执行器 Actuator	PPO A20/A100
2	阀体 Body Cover	BRASS
3	O型圈 O-Ring	FKM
4	密封件 Sealing	PTFE
5	球体 Ball	BRASS
6	阀杆 Stem	STAINLESS STEEL 304
7	O型圈 O-Ring	FKM

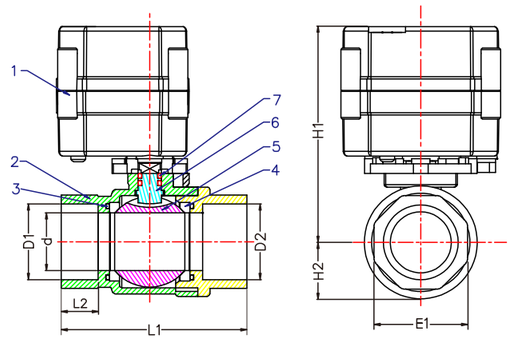

外形尺寸图 Outline Size Dimension

Size	D1/D2	d	L1	L2	E1	H1	H2
DN08	1/4"	8	49	12	20.5	80.5	12
DN10	3/8"	10	49	12	20.5	80.5	12
DN15	1/2"	15	56	13	25	84	16
DN20	3/4"	20	66	15	31	87	19
DN25	1"	25	71	15	38	89	22
DN32	1-1/4"	32	79	20	46	91	25

HK63-ST 精小型电动不锈钢三通球阀

Mini Motorized 3-Way Stainless Steel Ball Valve

产品参数 Technical Parameters

产品规格	Product Specifications	DN08~DN25
最大工作压力	Max. Working Pressure	1.0MPa
流通介质	Circulation Medium	Water, Air
额定电压	Rated Voltage	AC/DC 110-230V, DC9-24V (Optional)
开关的时间	Open/Close Time	≤15S
寿命	Life Time	70,000 Times
阀体材料	Valve Material	SS304, SS316 (Optional)
执行器材料	Actuator Material	Engineering Plastics
执行器扭矩	Torque Output	10.0N.M
环境温度	Ambient Temperature	-15°C-50°C
液体温度	Liquid Temperature	2°C-90°C
线长	Cable length	0. 5m, 1.5m (Optional)
手动方式	Manual Override	NO
阀开关指示窗	Indicator	YES or NO (Optional)
旋转角度	Actuator rotation	90°
密封件	Sealing Material	FKM & PTFE
防护等级	Protection Class	IP67

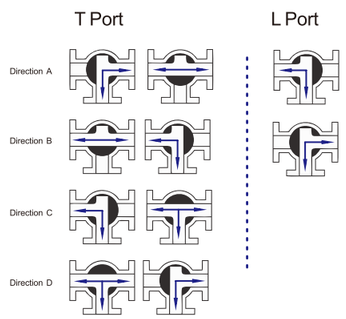

主要零件材质表 Main Parts Materials

NO.	名称 Nane	材质 material
1	执行器 Actuator	PPO A100
2	阀体 Body Cover	STAINLESS STEEL 304
3	O型圈 O-Ring	FKM
4	密封件 Sealing	PTFE
5	球体 Ball	STAINLESS STEEL 304
6	阀杆 Stem	STAINLESS STEEL 304
7	O型圈 O-Ring	FKM

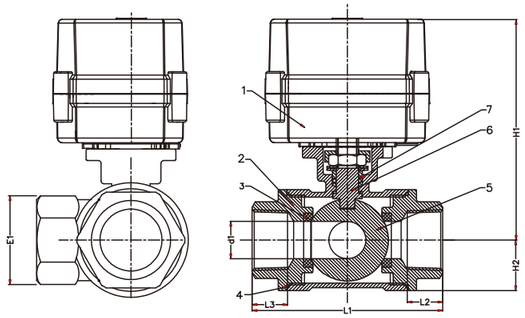

外形尺寸图 Outline Size Dimension

Size	D1/D2	d	L1	L2/L3	E1	H1	H2
DN08	1/4"	6	51	11	20.2	66	11
DN10	3/8"	6	51	11	20.2	66	11
DN15	1/2"	12	70	16	27	72	17
DN20	3/4"	15	75	16	31	76.5	20.5
DN25	1"	18	85	17	38	78	20.5

HK63-HT 精小型电动黄铜三通球阀

Mini Motorized 3-Way Brass Ball Valve

产品参数 Technical Parameters

产品规格	Product Specifications	DN08~DN25
最大工作压力	Max. Working Pressure	1.0MPa
流通介质	Circulation Medium	Water, Air
额定电压	Rated Voltage	AC/DC 110-230V, DC9-24V (Optional)
开关的时间	Open/Close Time	≤15S
寿命	Life Time	70,000 Times
阀体材料	Valve Material	Brass, Nickel Plated Brass
执行器材料	Actuator Material	Engineering Plastics
执行器扭矩	Torque Output	10.0N.M
环境温度	Ambient Temperature	-15°C-50°C
液体温度	Liquid Temperature	2°C-90°C
线长	Cable length	0. 5m, 1.5m (Optional)
手动方式	Manual Override	NO
阀开关指示窗	Indicator	YES or NO (Optional)
旋转角度	Actuator rotation	90°
密封件	Sealing Material	FKM & PTFE
防护等级	Protection Class	IP67

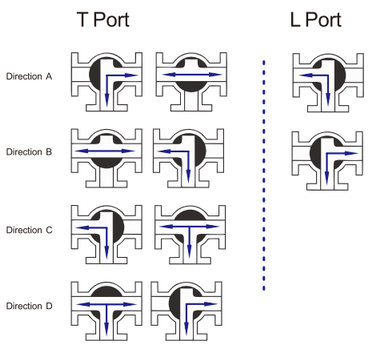

主要零件材质表 Main Parts Materials

NO.	名称 Nane	材质 material
1	执行器 Actuator	PPO A20/A100
2	阀体 Body Cover	BRASS
3	O型圈 O-Ring	FKM
4	密封件 Sealing	PTFE
5	球体 Ball	BRASS
6	阀杆 Stem	STAINLESS STEEL 304
7	O型圈 O-Ring	FKM

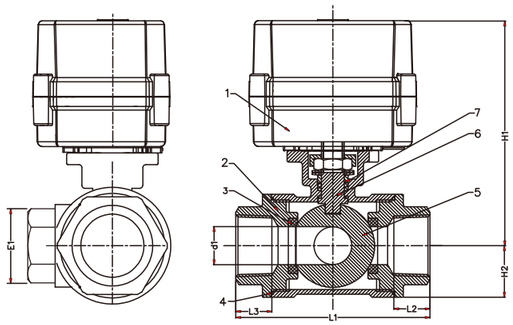

外形尺寸图 Outline Size Dimension

Size	D1/D2	d	L1	L2/L3	E1	H1	H2
DN08	1/4"	6	51	11	20.2	66	11
DN10	3/8"	6	51	11	20.2	66	11
DN15	1/2"	12	70	16	27	72	17
DN20	3/4"	15	75	16	31	76.5	20.5
DN25	1"	18	85	17	38	78	20.5

HK62-PY 精小型电动UPVC球阀

Mini Motorized UPVC Ball Valve

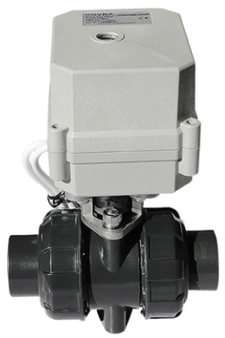

产品参数 Technical Parameters

产 品 规 格	Product Specifications	DN15~DN50
最大工作压力	Max. Working Pressure	1.0MPa
流 通 介 质	Circulation Medium	Water, Air
额 定 电 压	Rated Voltage	AC/DC 110-230V, DC9-24V (Optional)
开 关 的 时 间	Open/Close Time	≤12S
寿 命	Life Time	70,000 Times
阀 体 材 料	Valve Material	UPVC
执 行 器 材 料	Actuator Material	Engineering Plastics
执 行 器 扭 矩	Torque Output	15.0N.M
环 境 温 度	Ambient Temperature	-15°C-50°C
液 体 温 度	Liquid Temperature	2°C-90°C
线 长	Cable length	0. 5m, 1.5m (Optional)
手 动 方 式	Manual Override	YES
阀开关指示窗	Indicator	YES
旋 转 角 度	Actuator rotation	90°
密 封 件	Sealing Material	FKM & PTFE
防 护 等 级	Protection Class	IP67

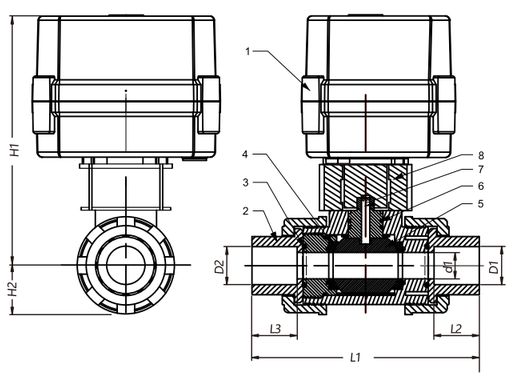

主要零件材质表 Main Parts Materials

NO.	名称 Nane	材质 material
1	执行器 Actuator	PPO A150
2	阀体 Body Cover	UPVC
3	O型圈 O-Ring	EPDM
4	密封件 Sealing	PTFE
5	球体 Ball	UPVC
6	阀杆 Stem	STAINLESS STEEL 304
7	O型圈 O-Ring	EPDM
8	支架 Holder	STAINLESS STEEL

外形尺寸图 Outline Size Dimension

Size	D1/D2	d1	L1	L2/L3	H1	H2	D1/D2			
							ANSI	DIN	JIS	CNS
DN15	1/2"	5	104.8	22.3	136.7	27.5	21.54	20.3	22.4	22.4
DN20	3/4"	20	113	25.5	141.2	32	26.87	25.3	26.45	26.4
DN25	1"	25	127.2	28.6	156.25	37.25	33.65	32.3	32.55	34.5
DN32	1-1/4"	32	142	32	162.4	42.75	42.42	40.3	38.6	42.5
DN40	1-1/2"	40	157	35	174	50	48.56	50.3	48.7	48.6
DN50	2"	50	171	38	194.4	60	60.63	63.3	60.8	60.6

HK62-S-W 精小型电动卫生级二通球阀

Mini Motorized 2-Way Sanitary Ball Valve

产品参数 Technical Parameters

产 品 规 格	Product Specifications	DN15~DN50
最大工作压力	Max. Working Pressure	1.0MPa
流 通 介 质	Circulation Medium	Water, Air
额 定 电 压	Rated Voltage	AC/DC 110-230V, DC9-24V (Optional)
开 关 的 时 间	Open/Close Time	≤12S
寿 命	Life Time	70,000 Times
阀 体 材 料	Valve Material	SS304, SS316, SS316L
执 行 器 材 料	Actuator Material	Engineering Plastics
执 行 器 扭 矩	Torque Output	15.0N.M
环 境 温 度	Ambient Temperature	-15°C-50°C
液 体 温 度	Liquid Temperature	2°C-90°C
线 长	Cable length	0. 5m, 1.5m (Optional)
手 动 方 式	Manual Override	YES
阀开关指示窗	Indicator	YES
旋 转 角 度	Actuator rotation	90°
密 封 件	Sealing Material	FKM & PTFE
防 护 等 级	Protection Class	IP67

主要零件材质表 Main Parts Materials

NO.	名称 Nane	材质 material
1	执行器 Actuator	PPO A150
2	阀体 Body Cover	SS304, SS316, SS316L
3	O型圈 O-Ring	PTFE
4	密封件 Sealing	PTFE
5	球体 Ball	SS304, SS316, SS316L
6	阀杆 Stem	STAINLESS STEEL 304
7	O型圈 O-Ring	PTFE

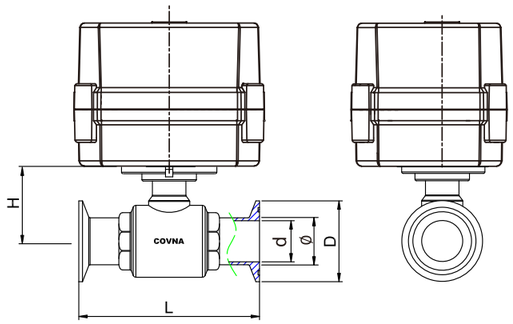

主要外形及连接法兰尺寸 Main Outline and Connecting

Size	1/2"	3/4"	1"	1-1/4"	1-1/2"	1-3/4"	2"	2-1/4"	2-1/2"	3"	3-1/2"	4"
	12.7	19	25	32	38	45	51	57	63	76	89	102
∅	16	19.05	25.4	31.8	38.1	45	50.8	57	63.5	76.5	89.1	101.6
d	12.7	16	22	29	35	42	48	53	59	72	85	97
D	25.4	50.5	50.5	50.5	50.5	64	64	77.5	77.5	91	106	119
L	75	103	116	122.5	136	146	161	170	178	200	210	249
H	27	38	46.5	49	53.5	58	68	60	68.5	78	89.5	103.5

HK65-S 精小型电动不锈钢球阀（时间控制）

Mini Motorized Stainless Steel Ball Valve（Time Control）

产品参数 Technical Parameters

产品规格	Product Specifications	DN15, DN20, DN25 (Optional)
最大工作压力	Max. Working Pressure	1.0MPa
流通介质	Circulation Medium	Water, Air
额定电压	Rated Voltage	AC/DC 110-230V, DC9-24V (Optional)
静态电流	Working Current	≤80mA
开关的时间	Open/Close Time	≤7S
寿命	Life Time	100,000 Times
阀体材料	Valve Material	SS304, SS316 (Optional)
执行器材料	Actuator Material	Engineering Plastics
时间设置范围	Keeping Valve Open Time	0H:0M:0S-99H:59M:59S
环境温度	Ambient Temperature	-15°C-50°C
液体温度	Liquid Temperature	2°C-90°C
手动方式	Manual Override	NO
阀开关指示窗	Indicator	YES
垫座	Gasket	PTFE
密封件	Sealing Material	FKM
防护等级	Protection Class	IP67

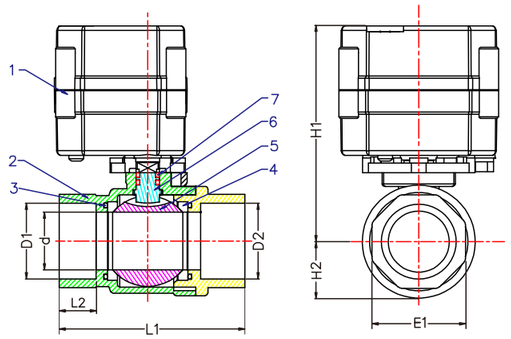

主要零件材质表 Main Parts Materials

NO.	名称 Nane	材质 material
1	执行器 Actuator	PPO A20/A100
2	阀体 Body Cover	STAINLESS STEEL 304
3	O型圈 O-Ring	FKM
4	密封件 Sealing	PTFE
5	球体 Ball	STAINLESS STEEL 304
6	阀杆 Stem	STAINLESS STEEL 304
7	O型圈 O-Ring	FKM

外形尺寸图 Outline Size Dimension

Size	D1/D2	d	L1	L2	E1	H1	H2
DN08	1/4"	8	49	12	20.5	80.5	12
DN10	3/8"	10	49	12	20.5	80.5	12
DN15	1/2"	15	56	13	25	84	16
DN20	3/4"	20	66	15	31	87	19
DN25	1"	25	71	15	38	89	22
DN32	1-1/4"	32	79	20	46	91	25

HK65-H 精小型电动黄铜二通球阀（时间控制）

Mini Motorized 2-Way Brass Ball Valve(Time Control)

产品参数 Technical Parameters

产品规格	Product Specifications	DN15, DN20, DN25 (Optional)
最大工作压力	Max. Working Pressure	1.0MPa
流通介质	Circulation Medium	Water, Air
额定电压	Rated Voltage	AC/DC 110-230V, DC9-24V (Optional)
静态电流	Working Current	≤80mA
开关的时间	Open/Close Time	≤7S
寿命	Life Time	100,000 Times
阀体材料	Valve Material	Brass, Nickel Plated Brass
执行器材料	Actuator Material	Engineering Plastics
时间设置范围	Keeping Valve Open Time	0H:0M:0S-99H:59M:59S
环境温度	Ambient Temperature	-15°C-50°C
液体温度	Liquid Temperature	2°C-90°C
手动方式	Manual Override	NO
阀开关指示窗	Indicator	YES
垫座	Gasket	PTFE
密封件	Sealing Material	FKM
防护等级	Protection Class	IP67

主要零件材质表 Main Parts Materials

NO.	名称 Nane	材质 material
1	执行器 Actuator	PPO A20/A100
2	阀体 Body Cover	BRASS
3	O型圈 O-Ring	FKM
4	密封件 Sealing	PTFE
5	球体 Ball	BRASS
6	阀杆 Stem	STAINLESS STEEL 304
7	O型圈 O-Ring	FKM

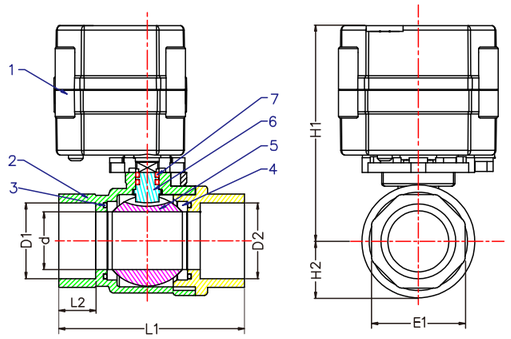

外形尺寸图 Outline Size Dimension

Size	D1/D2	d	L1	L2	E1	H1	H2
DN08	1/4"	8	49	12	20.5	80.5	12
DN10	3/8"	10	49	12	20.5	80.5	12
DN15	1/2"	15	56	13	25	84	16
DN20	3/4"	20	66	15	31	87	19
DN25	1"	25	71	15	38	89	22
DN32	1-1/4"	32	79	20	46	91	25

HK62-3PCS 精小型电动三片式球阀

Mini Motorized 3-PCS Ball Valve

产品参数 Technical Parameters

产品规格	Product Specifications	DN15	DN20	DN25	DN32	DN40	DN50	DN65
最大工作压力	Max. Working Pressure	1.6MPa						
流通介质	Circulation Medium	Water, Air						
额定电压	Rated Voltage	AC/DC 110-230V, DC9-24V (Optional)						
工作电流	Working Current	50mA~300mA		300mA~1.5A			500mA~2.0mA	
开关的时间	Open/Close Time	8~11S		9~13S			10~15S	
执行器扭矩	Torque Output	30NM		50NM			150NM	
寿命	Life Time	100,000 Times						
阀体材料	Valve Material	SS304, SS316 (Optional)						
执行器材料	Actuator Material	Engineering Plastics						
环境温度	Ambient Temperature	-15°C-50°C						
液体温度	Liquid Temperature	-20°C~120°C						
手动方式	Manual Override	NO						
阀开关指示窗	Indicator	NO						
垫座	Gasket	PTFE						
密封件	Sealing Material	PTFE						
防护等级	Protection Class	IP66						

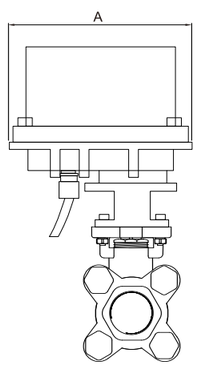

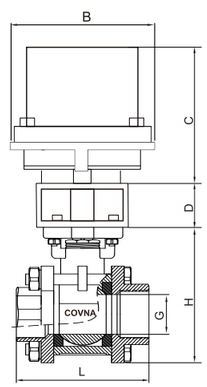

主要外形及连接尺 Outline and Connecting Size

SIZE	G	A	B	C	D	H	L
DN15	1/2"	89	74	73	25	62	72
DN20	3/4"	89	74	73	25	73	85
DN25	1"	89	74	73	25	85	90
DN32	1-1/4"	89	74	73	25	96	117
DN40	1-1/2"	106	88	98	33	110	136
DN50	2"	106	88	98	33	122	151

HK62-2PCS 精小型电动二片式球阀

Mini Motorized 2-PCS Ball Valve

产品参数 Technical Parameters

产品规格	Product Specifications	DN15	DN20	DN25	DN32	DN40	DN50	DN65
最大工作压力	Max. Working Pressure	1.6MPa						
流通介质	Circulation Medium	Water, Air						
额定电压	Rated Voltage	AC/DC 110-230V, DC9-24V (Optional)						
工作电流	Working Current	50mA~300mA		300mA~1.5A			500mA~2.0mA	
开关的时间	Open/Close Time	8~11S		9~13S			10~15S	
执行器扭矩	Torque Output	30NM		50NM			150NM	
寿命	Life Time	100,000 Times						
阀体材料	Valve Material	SS304, SS316 (Optional)						
执行器材料	Actuator Material	Engineering Plastics						
环境温度	Ambient Temperature	-15°C-50°C						
液体温度	Liquid Temperature	-20°C~120°C						
手动方式	Manual Override	NO						
阀开关指示窗	Indicator	NO						
垫座	Gasket	PTFE						
密封件	Sealing Material	PTFE						
防护等级	Protection Class	IP66						

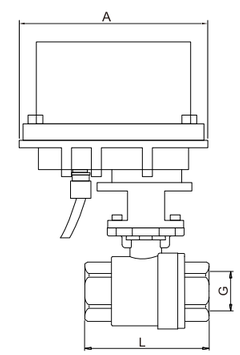

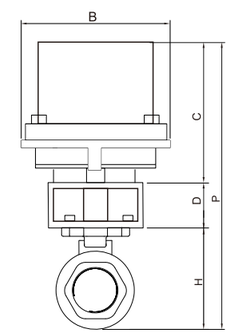

主要外形及连接尺 Outline and Connecting Size

SIZE	G	A	B	C	D	H	L	P
DN08	1/4"	89	74	73	25	25	55	125
DN10	3/8"	89	74	73	25	28	60	128
DN15	1/2"	89	74	73	25	32	65	132
DN20	3/4"	89	74	73	30	40	72	140
DN25	1"	106	88	98	33	48	85	175
DN32	1-1/4"	106	88	98	33	60	100	188
DN40	1-1/2"	106	88	98	33	72	106	200
DN50	2"	106	88	98	33	95	125	220

产品参数 Technical Parameters

产品规格	Product Specifications	DN15	DN20	DN25	DN32	DN40	DN50	DN65
最大工作压力	Max. Working Pressure	1.6MPa						
流通介质	Circulation Medium	Water, Air						
额定电压	Rated Voltage	AC/DC 110-230V, DC9-24V (Optional)						
工作电流	Working Current	50mA~300mA		300mA~1.5A			500mA~2.0mA	
开关的时间	Open/Close Time	8~11S		9~13S			10~15S	
执行器扭矩	Torque Output	30NM		50NM			150NM	
寿命	Life Time	100,000 Times						
阀体材料	Valve Material	SS304, SS316 (Optional)						
执行器材料	Actuator Material	Engineering Plastics						
环境温度	Ambient Temperature	-15°C-50°C						
液体温度	Liquid Temperature	-20°C~120°C						
手动方式	Manual Override	NO						
阀开关指示窗	Indicator	NO						
垫座	Gasket	PTFE						
密封件	Sealing Material	PTFE						
防护等级	Protection Class	IP66						

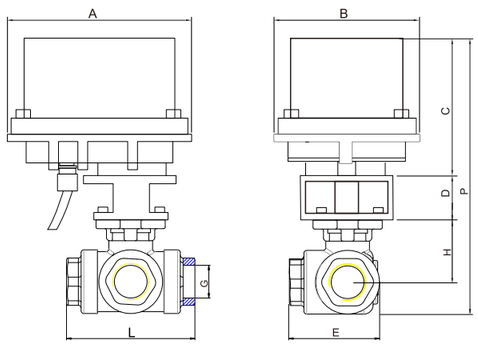

主要外形及连接尺 Outline and Connecting Size

SIZE	G	A	B	C	D	E	H	L	P
DN15	1/2"	89	74	61	31	53	53	72	157
DN20	3/4"	89	74	73	31	60	60	80	162
DN25	1"	106	88	90	33	67	67	88	210
DN32	1-1/4"	106	88	90	33	100	100	124	230
DN40	1-1/2"	106	88	90	44	107	107	138	260
DN50	2"	108	107	90	44	115	115	145	270
DN65	2-1/2"	117	107	107	48	136	136	170	325

阀体 密封件材料介质选型表 Valve body, seal material and medium modeling table

介质 Medium \ 材料 Material	铜 Brass	铸铁 Cast Iron	不锈钢 Stainless Steel	塑料 Plastic	丁腈橡胶 NBR	三元乙丙胶 EPDM	氟橡胶 PTFE	铁氟龙 Teflon
空气 Air	√	√	√	√	√	√	√	√
天然气 Natural Gas	√	√	√		√	√	√	√
氧气 Oxygen	√	√	√	√	√	√	√	√
氢气 Hydrogen	√		√		√		√	√
城市煤气 City Gas	√		√				√	√
工业煤气 Industrial Gas	√		√		√			√
氮气 Nitrogen	√		√				√	√
精制石油 Refined Oil	√	√	√				√	√
水 Water	√	√	√	√	√	√	√	√
水蒸汽 Steam	√	√	√		×	√	√	√
饮用水 Drinking Water	√	√	√	√		√		√
海水 Seawater	√		√	√	√	√	√	√
工业废水 Industrial Waste			√				√	√
汽油 Gasoline	√	√	√			×	√	√
煤油 Kerosene	√	√	√	√	√	×	√	√
柴油 Diesel	√	√	√	√	√	×	√	√
牛奶 Milk	√	√	√	√	√	√	√	√
酒 Liqueur	√	√	√	√	√	√	√	√
酒精 Alcohol	√	√	√		√	×		√
乙炔 Acetylene	√	√	√		√	×	√	√
乙醇 Ethanol	√	√	√		√	×	√	√
丙酮 Propanol	√	√	√		√	×	×	√
氨 Ammonia					×			√
甲苯 Toluene	√	√	√			×	√	√
二甲苯 Xylene	√	√	√			×	√	√
丙烷 Propane	√	√	√			×	√	√
甲烷 Methane	√	√	√		√	×	√	√
二氧化硫 Sulfur Dioxide	√	√	√				√	√
氢氧化钠 <20% Sodium Hydroxide		√	√		√	×		√
硝酸 <10% Nitric Acid			√				√	√
硫酸<20% Sulfuric Acid							√	√
盐酸10% Hydrochloric Acid								√
醋酸 Acetic Acid	√	√	√		√	×	√	√

√ 表示良好 × 表示不适用 空白表示资料不足

" √ "Said good, " × " Indicates not applicable, Blank indicates insufficient data